Variable speed drives

Altivar 21

Catalogue
October

06

For 3-phase asynchronous motors from 0.75 to 75 kW

ARCO CONTROL
:051-37133855-6
:09014284236
WWW.ARCOKALA.COM

a brand of Schneider Electric

Telemecanique

Simply Smart !

telemecanique.com

This international site allows you to access all the Telemecanique products in just 2 clicks via comprehensive range data-sheets, with direct links to:

- Complete library: technical documents, catalogs, certificates, FAQs, brochures...
- Selection guides from the e-catalog.
- Product discovery sites and their Flash animations.

You will also find illustrated overviews, news to which you can subscribe, a discussion forum, the list of country contacts...
To live automation solutions every day!

Flexibility

- Interchangeable modular functions, to better meet the requirements for extensions
- Software and accessories common to multiple product families

Compactness

- High functionality in a minimum of space
- Freedom in implementation

Ingenuity

- Auto-adapts to its environment, "plug & play"
- Application functions, control, communication and diagnostics embedded in the products
- User-friendly operation either directly on the product or remotely

Openness

- Compliance with field bus, connection, and software standards
- Enabling decentralised or remote surveillance via the web with Transparent Ready products

Simplicity

- Cost effective “optimum” offers that make selection easy for most typical applications
- Products that are easy to understand for users, electricians and automation specialists
- User-friendly intuitive programming

ARCO CONTROL

:051-37133855-6
:09014284236
WWW.ARCOKALA.COM

Contents

Variable speed drives for asynchronous motors Altivar 21

Selection guide . . . . . *page 2*

■ **Presentation** . . . . . *page 4*

■ **Variable speed drives Altivar 21**

- □ Characteristics . . . . . *page 6*
- □ Reduction of current harmonics . . . . . *page 12*
- □ Operation . . . . . *page 14*
- □ References . . . . . *page 16*

■ **Options**

- □ Accessories, dialogue . . . . . *page 18*
- □ Communication buses and networks . . . . . *page 23*
- □ Additional EMC input filters . . . . . *page 25*

■ **Dimensions** . . . . . *page 26*

■ **Schemes** . . . . . *page 30*

■ **Electromagnetic compatibility** . . . . . *page 32*

■ **Motor starters** . . . . . *page 34*

■ **Mounting and installation recommendations** . . . . . *page 38*

■ **Functions** . . . . . *page 48*

■ **Communication via Modbus serial link** . . . . . *page 69*

Variable speed drives for asynchronous motors

Type of machine		Simple machines		Pumps and fans (Building (HVAC) *(1)*
Power range for 50…60 Hz (kW) supply		**0.18…2.2**	**0.18…15**	**0.75…75**
	Single phase 100…120 V (kW)	0.18…0.75	–	–
	Single phase 200…240 V (kW)	0.18…2.2	0.18…2.2	–
	Three phase 200…230 V (kW)	0.18…2.2	–	–
	Three phase 200…240 V (kW)	–	0.18…15	0.75…30
	Three phase 380…480 V (kW)	–	–	0.75…75
	Three phase 380…500 V (kW)	–	0.37…15	–
	Three phase 525…600 V (kW)	–	0.75…15	–
Drive	Output frequency	0.5…200 Hz	0.5…500 Hz	0.5…200 Hz
	Type of control – Asynchronous motor	Sensorless flux vector control		Sensorless flux vector control, voltage/frequency ratio (2 points), energy saving ratio
	Type of control – Synchronous motor	–		–
	Transient overtorque	150…170% of the nominal motor torque	180% of the nominal motor torque for 2 seconds	110% of the nominal motor torque
Functions				
Number of functions		26	50	50
Number of preset speeds		4	16	7
Number of I/O	Analog inputs	1	3	2
	Logic inputs	4	6	3
	Analog outputs	–	1	1
	Logic outputs	1	–	–
	Relay outputs	1	2	2
Communication	Embedded	–	Modbus and CANopen	Modbus
	Available as an option	–	Ethernet TCP/IP, DeviceNet, Fipio, Profibus DP	LonWorks, METASYS N2, APOGEE FLN, BACnet
Cards (available as an option)		–	–	–
Standards and certifications		IEC/EN 61800-5-1, IEC/EN 61800-3 (environments 1 and 2)		
		EN 55011: Group 1, class A and class B CE, UL, CSA, C-Tick, N998	EN 55011: Group 1, class A and class B with option card, CE, UL, CSA, C-Tick, N998	EN 55011: Group 1, class A and class B with option card, CE, UL, CSA, C-Tick, NOM 117
References		ATV 11	ATV 31	ATV 21
Pages		Please consult our “Soft starters and variable speed drives” catalogue		16 and 17

(1) Heating Ventilation Air Conditioning

Pumps and fans (Industry)	**Complex machines**
0.37…630	**0.37…500**
–	–
0.37…5.5	0.37…5.5
–	–
0.75…90	0.37…75
0.75…630	0.75…500
–	–
–	–
0,5…1000 Hz up to 37 kW, 0.5…500 Hz from 45 to 630 kW	1…1600 Hz up to 37 kW, 1…500 Hz from 45 to 500 kW
Sensorless flux vector control, voltage/frequency ratio (2 or 5 points), energy saving ratio	Flux vector control with or without sensor, voltage/frequency ratio (2 or 5 points), ENA System
–	Vector control without speed feedback
120…130% of the nominal motor torque for 60 seconds	220% of the nominal motor torque for 2 seconds 170% for 60 seconds
> 100	> 150
8	16
2…4	2…4
6…20	6…20
1…3	1…3
0…8	0…8
2…4	2…4
Modbus and CANopen	
Ethernet TCP/IP, Fipio, Modbus Plus, INTERBUS, Profibus DP, Modbus/Uni-Telway, DeviceNet, LONWORKS, METASYS N2, APOGEE FLN, BACnet	Ethernet TCP/IP, Fipio, Modbus Plus, INTERBUS, Profibus DP, Modbus/Uni-Telway, DeviceNet
I/O extension cards, “Controller Inside” programmable card, multi-pump cards	Encoder interface cards, I/O extension cards, “Controller Inside” programmable card
IEC/EN 61800-5-1, IEC/EN 61800-3 (environments 1 and 2, C1 to C3), EN 55011, IEC/EN 61000-4-2/4-3/4-4/4-5/4-6/4-11 CE, UL, CSA, DNV, C-Tick, NOM 117, GOST	
ATV 61	**ATV 71**
Please consult our “Soft starters and variable speed drives” catalogue	

Variable speed drives for asynchronous motors
Altivar 21

100074-50-M

Ventilation application

104273-50-M

Air conditioning application

62822-50-M

Pumping application

Applications

The Altivar 21 drive is a frequency inverter for 0.75 kW to 75 kW three-phase asynchronous motors.
It has been designed for state-of-the-art applications in heating, ventilation and air conditioning (HVAC) in the service industry:
- Ventilation
- Air conditioning
- Pumping

The Altivar 21 drive considerably improves building management by:
- Providing a significant energy saving
- Simplifying circuits by removing valves and flow control gates
- Reducing noise pollution
- Offering flexibility and ease of adjustment for installations

The Altivar 21 drive was designed to ensure electromagnetic compatibility and to reduce current harmonics.
Its various design versions make it possible to reduce installation costs by offering EMC class A or class B filters with the following advantages:
- More compact size
- Simplified wiring, thus reduced cost

The Altivar 21 drive is easily integrated into building management as it offers several communication cards:
- LonWorks
- BACnet
- METASYS N2
- APOGEE FLN

Functions

The Altivar 21 drive makes immediate operation of your applications possible as well as allowing settings to be changed quickly via the “Quick menu”.

Functions designed specifically for pumping and ventilation applications

The Altivar 21 drive combines all the functions that your applications require:
- Energy saving ratio, quadratic voltage/frequency ratio
- Automatic catching of a spinning load with speed detection
- Adaptation of current limiting according to speed
- Noise and resonance suppression by means of the switching frequency, which is adjustable up to 16 kHz during operation
- Preset speeds
- Integrated PID regulator with preset references and automatic/manual (“Auto/Man.”) mode
- Electricity and service hours meter
- Switching of command channels (references and run command) using the LOC/REM key
- Sleep/wake-up function
- Automatic ramp adaptation
- Ramp switching
- Reference calibration and limitation
- Switching of two motor rating plates

Protection functions

The Altivar 21 drive combines all the protection functions that your applications require:
- Motor and drive thermal protection, PTC thermal probe management
- Protection against overloads and overcurrents in continuous operation
- Machine mechanical protection via jump frequency function
- Protection of the installation by means of underload and overload detection
- Protection via multiple fault management and configurable alarms

Service continuity

Installation safety is assured by means of the forced operation function with inhibition of faults, direction of operation and configurable references.

Characteristics: pages 6 to 11
References: pages 16 and 17
Dimensions: pages 26 to 29
Schemes: pages 30 to 33
Functions: pages 48 to 67

Variable speed drives for asynchronous motors
Altivar 21

ATV 21HD75N4

ATV 21H075M3X

ATV 21WD18N4,
ATV 21WD18N4C

ATV 21W075N4,
ATV 21W075N4C

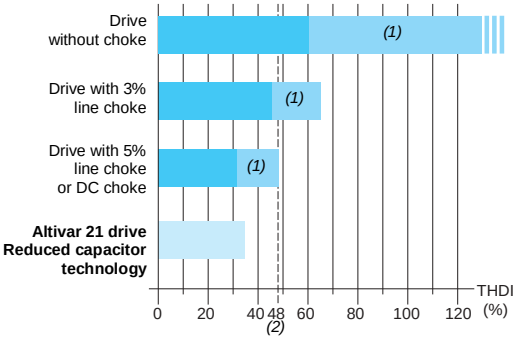

THDI: Total current harmonic distortion
(1) Typical use
(2) Maximum THDI conforming to standard IEC/EN 61000-3-12

Reduced capacitor technology: reduction of current harmonics

Flexibility and user-friendliness

The Altivar 21 drive has an integrated 7-segment display terminal. This terminal is used to identify and determine the active command channels (run command and speed reference).

It is also enables:
- Direct access to the last five modified parameters
- Identification of the different factory-set parameters in the form of a list in a menu
- Backup of the customer configuration

The Altivar 21 drive offers a quick setup function in the form of its “Quick menu”, which includes the 10 key parameters for your installation (acceleration, deceleration, motor parameters, etc.).

A comprehensive offer

The Altivar 21 range of variable speed drives extends across a range of motor power ratings from 0.75 kW to 75 kW with the following types of power supply:
- 200…240 V three-phase, 0.75 kW to 30 kW, UL type 1/IP 20, (**ATV 21H●●●M3X**)
- 380…480 V three-phase, 0.75 kW to 75 kW, UL Type 1/IP 20, (**ATV 21H●●●N4**)
- 380…480 V three-phase, 0.75 kW to 75 kW, IP 54, (**ATV 21W●●●N4** and **ATV 21W●●●N4C**)

The Altivar 21 drive integrates the Modbus protocols as standard as well as numerous functions. With the communication cards offered (LonWorks, METASYS N2, APOGEE FLN and BACnet) the Altivar 21 is the ideal drive for the building market (HVAC).

The entire range conforms to international standards IEC/EN61800-5-1, IEC/EN61800-2, IEC/EN61800-3. It is UL, CSA, C-Tick and NOM 117 certified and has been developed to meet the requirements of directives regarding protection of the environment (RoHS, WEEE, etc.) as well as those of the European Directives to obtain the CE mark.

Electromagnetic compatibility EMC

The incorporation of EMC filters in **ATV 21●●●●N4** drives and the recognition of EMC requirements simplifies installation and provides an economical means of ensuring machines meet CE marking requirements.

ATV 21W●●●N4C drives have integrated class B EMC filters, which make them compliant with the requirements of EN 55011 (class B group 1) and IEC/EN 61800-3 (category C1) standards.

ATV 21H●●●M3X drives have been designed without an EMC filter. Filters are available as an option and can be installed by the user to reduce emission levels (see pages 24 and 25).

Using technology based on a reduced capacitor, the Altivar 21 drive is operational straight away and without disturbance. There is no point adding options to deal with the current harmonics to obtain a THDI *(1)* of less than 35%.
This THDI value is considerably less than the THDI of 48% imposed by the IEC/EN 61000-3-12 standard. The Altivar 21 drive removes the need and the cost of adding a line choke or a DC choke.

Installation

Altivar 21 drives are compact UL Type 1/IP 20 or IP 54 products which meet electromagnetic compatibility requirements and reduce current harmonics.

This range reduces installation costs by optimizing the size of the enclosures (floor-standing, wall-mounted, etc.).
Altivar 21 drives are designed to operate in an enclosure in an ambient temperature of:
- - 40°C without derating
- Up to 50°C with derating (see curves on pages 39 to 43)

They can also be mounted side by side (see page 38).

Altivar 21 drives can also be wall-mounted in compliance with UL type 1 requirements using kits **VW3 A31 8●●** and **VW3 A9 ●●●** (see page 18).

(1) THDI: Total current harmonic distortion

Variable speed drives for asynchronous motors
Altivar 21

Environmental characteristics

Conformity to standards			Altivar 21 drives have been developed to conform to the strictest international standards and the recommendations relating to electrical industrial control devices (IEC, EN), in particular: low voltage, IEC/EN 61800-5-1, IEC/EN 61800-3 (conducted and radiated EMC immunity and emissions).
EMC immunity			IEC/EN 61800-3, environments 1 and 2 IEC/EN 61000-4-2 level 3 IEC/EN 61000-4-3 level 3 IEC/EN 61000-4-4 level 4 IEC/EN 61000-4-5 level 3 IEC/EN 61000-4-6 level 3 IEC/EN 61000-4-11 *(1)*
Conducted and radiated EMC em issions for drives			IEC/EN 61800-3, environments 1 and 2, category C1, C2 or C3
	ATV 21H●●●M3X		With additional EMC filter *(2)*: ■ EN 55011 class A group 1, IEC/EN 61800-3 category C2 or C3 ■ EN 55011 class B group 1, IEC/EN 61800-3 category C1
	ATV 21H●●●N4		EN 55011 class A group 1, IEC/EN 61800-3 category C2 or C3 With additional EMC filter *(2)*: ■ EN 55011 class B group 1, IEC/EN 61800-3 category C1
	ATV 21W●●●N4		EN 55011 class A group 1, IEC/EN 61800-3 category C2 or C3
	ATV 21W●●●N4C		EN 55011 class B group 1, IEC/EN 61800-3 category C1
CE marking			The drives have CE marking in accordance with the European directives on low voltage (73/23/EEC and 93/68/EEC) and EMC (89/336/EEC).
Product certifications			UL, CSA, C-Tick and NOM 117
Degree of protection			IEC/EN 61800-5-1, IEC/EN 60529
	ATV 21H●●●M3X ATV 21H●●●N4		IP 21 and IP 41 on upper part IP 20 without blanking plate on upper part of cover UL Type 1 with accessories VW3 A31 814…817 and VW3 A9 206…A9 208 (see page 18)
	ATV 21W●●●N4 ATV 21W●●●N4C		IP 54
Vibration resistance			1.5 mm peak to peak from 3…13 Hz, 1 gn from 13…200 Hz, conforming to IEC/EN 60068-2-6
Shock resistance			15 gn for 11 ms conforming to IEC/EN 60068-2-27
Maximum ambient pollution	ATV 21H075M3X…HD18M3X ATV 21H075N4…HD18N4 ATV 21W075N4…WD18N4 ATV 21W075N4C…WD18N4C		Degree 2 conforming to IEC/EN 61800-5-1
	ATV 21HD22M3X, HD30M3X ATV 21HD22N4…HD75N4 ATV 21WD22N4…WD75N4 ATV 21WD22N4C…WD75N4C		Degree 3 conforming to IEC/EN 61800-5-1
Environmental conditions	ATV 21H●●●M3X ATV 21●●●●N4 ATV 21W●●●N4C		IEC 60721-3-3 classes 3C1 and 3S2
Relative humidity			5…95% without condensation or dripping water conforming to IEC 60068-2-3
Ambient air temperature around the unit	Operation	**°C**	For ATV 21H●●●M3X and ATV 21H●●●N4 drives: -10…+40 without derating. Up to 50°C with derating, see the derating curves on pages 39 to 43. For ATV 21W●●●N4 and ATV 21W●●●N4C drives: -10…+40 without derating. Up to +50°C with derating, see the derating curves on pages 44 and 45.
	Storage	**°C**	-25…+70
Maximum operating altitude		**m**	1000 without derating 1000…3000 derating the current by 1% per additional 100 m. Limited to 2000 m for the "Corner Grounded" distribution network.
Operating position Maximum permanent angle in relation to the normal vertical mounting position			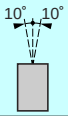

(1) Drive behaviour according to the drive configurations (see pages 60, 61, 64 and 65).
(2) See table on page 25 to check permitted cable lengths.

ARCO CONTROL
:051-37133855-6
:09014284236
WWW.ARCOKALA.COM

Variable speed drives for asynchronous motors

Altivar 21

Drive characteristics

Output frequency range		**Hz**	0.5…200
Configurable switching frequency	ATV 21H075M3X…HD15M3X ATV 21H075N4…HD15N4	**kHz**	Nominal switching frequency: 12 kHz without derating in continuous operation. Adjustable during operation from 6…16 kHz Above 12 kHz, see the derating curves on pages 39 to 41.
	ATV 21HD18M3X…HD30M3X ATV 21HD18N4…HD75N4	**kHz**	Nominal switching frequency: 8 kHz without derating in continuous operation. Adjustable during operation from 6…16 kHz Above 8 kHz, see the derating curves on pages 40 to 43.
	ATV 21W075N4…WD15N4 ATV 21W075N4C…WD15N4C	**kHz**	Nominal switching frequency: 12 kHz without derating in continuous operation. Adjustable during operation from 6…16 kHz Above 12 kHz, see the derating curves on page 44.
	ATV 21WD18N4…WD75N4 ATV 21WD18N4C…WD75N4C	**kHz**	Nominal switching frequency: 8 kHz without derating in continuous operation. Adjustable during operation from 6…16 kHz Above 8 kHz, see the derating curves on pages 44 and 45.
Speed range			1…10
Speed accuracy	For a torque variation of 0.2 Tn to Tn		±10% of nominal slip, without speed feedback
Torque accuracy			±15%
Transient overtorque			120% of the nominal motor torque (typical value at ±10%) for 60 s
Maximum transient current			110% of the nominal drive current for 60 s (typical value)
Motor control profile	Asynchronous motor		Energy saving ratio Quadratic voltage/frequency ratio Constant voltage/frequency ratio Constant voltage/frequency ratio with automatic IR compensation Sensorless Flux Vector Control (FVC) (current vector)
	Synchronous motor		Current flux vector control without speed feedback
Frequency loop			PI regulator with adjustable structure for a speed response adapted to the machine (accuracy, speed)
Slip compensation			Automatic whatever the load. Can be suppressed or adjusted Not available with voltage/frequency ratios

Electrical power characteristics

Power supply	Voltage	**V**	200 - 15%...240 + 10% three-phase for ATV 21H●●●M3X 380 - 15%...480 + 10% three-phase for ATV 21●●●●N4 and ATV 21W●●●N4C
	Frequency	**Hz**	50 - 5%...60 + 5%
Signalling			1 red LED: LED lit indicates the presence of voltage on the drive DC bus
Output voltage			Maximum three-phase voltage equal to line supply voltage
Drive noise level			Conforming to directive 86-188/EEC
	ATV 21H075M3X…HU75M3X ATV 21H075N4…HD11N4	**dBA**	51
	ATV 21HD11M3X…HD18M3X ATV 21HD15N4, HD18N4	**dBA**	54
	ATV 21HD22M3X ATV 21HD22N4, HD30N4	**dBA**	59.9
	ATV 21HD30M3X	**dBA**	63.7
	ATV 21HD37N4, HD45N4	**dBA**	64
	ATV 21HD55N4, HD75N4	**dBA**	63.7
	ATV 21W075N4…WU22N4 ATV 21W075N4C…WU22N4C	**dBA**	48
	ATV 21WU30N4…WU75N4 ATV 21WU30N4C…WU75N4C	**dBA**	55
	ATV 21WD11N4, WD15N4 ATV 21WD11N4C, WD15N4C	**dBA**	57.4
	ATV 21WD18N4 ATV 21WD18N4C	**dBA**	60.2
	ATV 21WD22N4, WD30N4 ATV 21WD22N4C, WD30N4C	**dBA**	59.9
	ATV 21WD37N4, WD45N4 ATV 21WD37N4C, WD45N4C	**dBA**	64
	ATV 21WD55N4, WD75N4 ATV 21WD55N4C, WD75N4C	**dBA**	63.7
Electrical isolation			Between power and control (inputs, outputs, power supplies)

Connection cable characteristics

Type of cable for	Mounting in an enclosure	Single-strand IEC cable, ambient temperature 45°C, copper 90°C XLPE/EPR or copper 70°C PVC
	Mounting in an enclosure with a UL Type 1 kit	3-strand UL 508 cable except for choke (2-strand UL 508 cable), ambient temperature 40°C, copper 75°C PVC

Connection characteristics (terminals for the power supply and the motor)

Drive terminals		**L1/R, L2/S, L3/T**	**U/T1, V/T2, W/T3**
Maximum wire size and tightening torque	ATV 21H075M3X…HU22M3X	1.5 mm², AWG 14 1.4 Nm	
	ATV 21HU30M3X	2.5 mm², AWG 12 1.4 Nm	
	ATV 21HU40M3X	2.5 mm², AWG 10 1.4 Nm	
	ATV 21HU55M3X	6 mm², AWG 8 2.8 Nm	
	ATV 21HU75M3X	10 mm², AWG 8 2.8 Nm	
	ATV 21HD11M3X	16 mm², AWG 6 5 Nm	
	ATV 21HD15M3X	25 mm², AWG 4 5 Nm	
	ATV 21HD18M3X	35 mm², AWG 3 5 Nm	
	ATV 21HD22M3X	35 mm², AWG 2 12 Nm	
	ATV 21HD30M3X	70 mm², AWG 1/0 41 Nm	
	ATV 21H075N4…HU55N4	2 mm², AWG 14 1.4 Nm	
	ATV 21HU75N4	2 mm², AWG 12 2.8 Nm	
	ATV 21HD11N4	3.5 mm², AWG 10 2.8 Nm	
	ATV 21HD15N4	5.5 mm², AWG 8 5 Nm	
	ATV 21HD18N4	8 mm², AWG 8 5 Nm	
	ATV 21HD22N4	14 mm², AWG 6 12 Nm	
	ATV 21HD30N4	22 mm², AWG 4 12 Nm	
	ATV 21HD37N4, HD45N4	50 mm², AWG 1/0 24 Nm, 212 lb.in	
	ATV 21HD55N4, HD75N4	150 mm², 300 kcmil 41 Nm, 360 lb.in	
	ATV 21W075N4…WU55N4 ATV 21W075N4C…WU55N4C	1.5 mm², AWG 14 1.4 Nm	
	ATV 21WU75N4 ATV 21WU75N4C	2.5 mm², AWG 12 2.8 Nm	
	ATV 21WD11N4 ATV 21WD11N4C	4 mm², AWG 10 4 Nm	
	ATV 21WD15N4 ATV 21WD15N4C	6 mm², AWG 8 4 Nm	
	ATV 21WD18N4 ATV 21WD18N4C	10 mm², AWG 8 4 Nm	
	ATV 21WD22N4 ATV 21WD22N4C	16 mm², AWG 6 12 Nm	
	ATV 21WD30N4 ATV 21WD30N4C	25 mm², AWG 4 41 Nm	
	ATV 21WD37N4, WD45N4 ATV 21WD37N4C, WD45N4C	50 mm², AWG 1/0 8 Nm, 70.8 lb.in	50 mm², AWG 1/0 24 Nm, 212 lb.in
	ATV 21WD55N4, WD75N4 ATV 21WD55N4C, WD75N4C	150 mm², 250 kcmil 20 Nm, 177 lb.in	150 mm², 300 kcmil 41 Nm, 360 lb.in

Electrical control characteristics

Internal supplies available		Short-circuit and overload protection: ■ 1 x 10.5 V ⎓ ±5% supply for the reference potentiometer (1 to 10 kΩ), maximum current 10 mA ■ 1 x 24 V ⎓ supply (min. 21 V, max. 27 V), maximum current 200 mA
Analog inputs	VIA	Switch-configurable current or voltage analog input: ■ Voltage analog input 0...10 V ⎓, impedance 30 kΩ (max. safe voltage 24 V) ■ Current analog input X-Y mA by programming X and Y from 0 to 20 mA, with im pedance 242 Ω Max. sampling time: 2 ms ±0.5 ms Resolution: 11 bits Accuracy: ±0.6% for a temperature variation of 60°C Linearity: ±0.15% of the maximum value This analog input is also configurable as a logic input (see page 31).
	VIB	Voltage analog input, configurable as an analog input or as a PTC probe input. Voltage analog input: ■ 0...10 V ⎓, impedance 30 kΩ (max. safe voltage 24 V) ■ Max. sampling time: 2 ms ±0.5 ms ■ Resolution: 11 bits ■ Accuracy: ±0.6% for a temperature variation of 60°C ■ Linearity: ±0.15% of the maximum value PTC probe input: ■ 6 probes max. mounted in series ■ Nominal value < 1.5 kΩ ■ Trip resistance 3 kΩ, reset value 1.8 kΩ ■ Short-circuit protection < 50 Ω
Analog output	FM	1 switch-configurable voltage or current analog output: ■ Voltage analog output 0...10 V ⎓, minimum load impedance 470 Ω ■ Current analog output X-Y mA by programming X and Y from 0 to 20 mA, maximum load impedance 500 Ω Max. sampling time: 2 ms ±0.5 ms Resolution: 10 bits Accuracy: ±1% for a temperature variation of 60°C Linearity: ±0.2%
Configurable relay outputs	FLA, FLB, FLC	1 relay logic output, one “N/C” contact and one “N/O” contact with common point Minimum switching capacity: 3 mA for 24 V ⎓ Maximum switching capacity: ■ On resistive load (cos φ = 1): 5 A for 250 V ∿ or 30 V ⎓ ■ On inductive load (cos φ = 0.4 and L/R = 7 ms): 2 A for 250 V ∿ or 30 V ⎓ Max. response time: 7 ms ±0.5 ms Electrical service life: 100,000 operations
	RY, RC	1 relay logic output, one “N/O” contact Minimum switching capacity: 3 mA for 24 V ⎓ Maximum switching capacity: ■ On resistive load (cos φ = 1): 5 A for 250 V ∿ or 30 V ⎓ ■ On inductive load (cos φ = 0.4 and L/R = 7 ms): 2 A for 250 V ∿ or 30 V ⎓ Max. response time: 7 ms ±0.5 ms Electrical service life: 100,000 operations
Logic inputs	F, R, RES	3 programmable logic inputs, 24 V ⎓ , compatible with level 1 PLC, IEC 65A-68 standard Impedance: 3.5 kΩ Maximum voltage: 30 V Max. sampling time: 2 ms ±0.5 ms Multiple assignment makes it possible to configure several functions on one input
	Positive logic (Source)	State 0 if ⩽ 5 V or logic input not wired, state 1 if ⩾ 11 V
	Negative logic (Sink)	State 0 if ⩾ 16 V or logic input not wired, state 1 if ⩽ 10 V
Maximum I/O wire size and tightening torque		2.5 mm^2 (AWG 14) 0.6 Nm

ARCO CONTROL
:051-37133855-6
:09014284236
WWW.ARCOKALA.COM

Electrical control characteristics (continued)

Acceleration and deceleration ramps			Ramp profiles: ■ Linear, can be adjusted separately from 0.01 to 3200 s ■ Automatic adaptation of acceleration and deceleration ramp times based on the load.
Braking to a standstill			By DC injection by a command on a programmable logic input. Period adjustable from 0 to 20s or continuous, current adjustable from 0 to In, frequency threshold adjustable from 0 to the maximum frequency.
Main drive protection and safety features			Thermal protection: ■ Against overheating ■ Of the power stage Protection against: ■ Short-circuits between motor phases ■ Input phase breaks ■ Overcurrents between output phases and earth ■ Overvoltages on the DC bus ■ A break on the control circuit ■ Exceeding the limit speed Safety function for: ■ Line supply overvoltage and undervoltage ■ Input phase loss
Motor protection (see page 63)			Thermal protection integrated in drive via continuous calculation of I^2t taking speed into account: ■ Memorization of the motor thermal state ■ Function can be modified via operator dialogue terminals, depending on the type of motor (force-cooled or self-cooled) Protection against motor phase breaks Protection with PTC probes
Dielectric strength	ATV 21H●●●M3X		Between earth and power terminals: 2830 V ⎓ Between control and power terminals: 4230 V ⎓
	ATV 21●●●●N4 ATV 21W●●●N4C		Between earth and power terminals: 3535 V ⎓ Between control and power terminals: 5092 V ⎓
Insulation resistance to earth			> 1 MΩ (electrical isolation) 500 V ⎓ for 1 minute
Frequency resolution	Display units	**Hz**	0.1
	Analog inputs	**Hz**	0.024/50 Hz (11 bits)

ARCO CONTROL
:051-37133855-6
:09014284236
WWW.ARCOKALA.COM

Communication port characteristics

Protocol			Modbus
Structure	Connector		1 RJ45 connector
	Physical interface		2-wire RS 485
	Transmission mode		RTU
	Transmission speed		Configurable via the display terminal: 9600 bps or 19200 bps
	Format		Configurable via the terminal: - 8 bits, odd parity, 1 stop - 8 bits, even parity, 1 stop - 8 bits, no parity, 1 stop
	Polarization		No polarization impedances These should be provided by the wiring system (for example, in the master)
	Address		1 to 247, configurable via the display terminal
Services	Messaging		Read Holding Registers (03) 2 words maximum Write Single Register (06) Write Multiple Registers (16) 2 words maximum Read Device Identification (43)
	Communication monitoring		Can be inhibited. “Time out”, which can be set between 0.1 s and 100 s

ARCO CONTROL
:051-37133855-6
:09014284236
WWW.ARCOKALA.COM

Variable speed drives for asynchronous motors

Altivar 21

Reduction of current harmonics

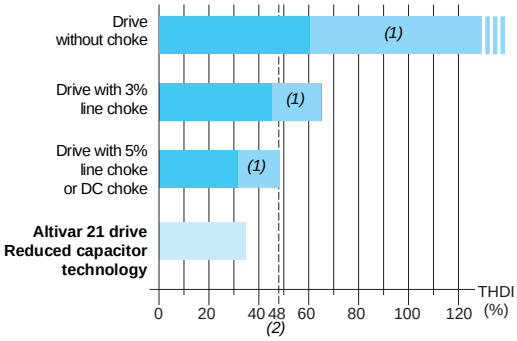

THDI: Total current harmonic distortion
(1) Typical use
(2) Maximum THDI conforming to standard IEC/EN 61000-3-12

THDI based on the technologies used

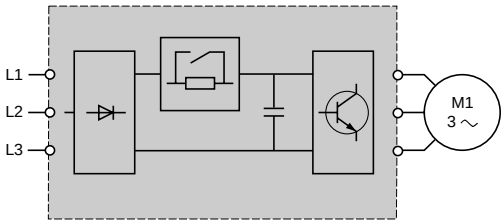

Altivar 21

Reduced capacitor technology

Presentation

The traditional solutions for reducing current harmonics are as follows:
- Line chokes
- DC chokes

These solutions typically reduce the THDI *(1)* to a level less than 48% *(2)*. If a choke is not added, the THDI is generally between 60 and 130% (see diagram opposite).

Depending on their type, these external or internal chokes are most often offered as an option and have the following disadvantages:
- Increased cost
- Increased installation time
- Increased overall size
- Increased drive losses with a DC choke

In order to overcome these disadvantages, the Altivar 21 drive integrates new technology: **reduced capacitor technology**.

This integrated technology makes it possible to obtain a THDI *(1)* less than 35% without having to add a choke, offering the following advantages:
- Optimized technology through the reduction of current harmonics by decreasing the filter capacitors
- Greater reduction of current harmonics compared with traditional solutions, line chokes and DC chokes
- Quick setup
- Reduced costs

Example of current harmonic levels for ATV 21H●●●M3X drives *(3)*

Motor power		For ATV 21 drives	Line supply		Current harmonic levels																	THD *(4)*
			Line current	Line Isc	H1	H5	H7	H11	H13	H17	H19	H23	H25	H29	H31	H35	H37	H41	H43	H47	H49	
kW	*HP*		A	kA	A	%	%	%	%	%	%	%	%	%	%	%	%	%	%	%	%	%
Three-phase supply voltage: 230 V 50 Hz																						
0.75	*1*	H075M3X	2.83	5	2.7	17.8	17.9	8.9	9.6	5.8	6.6	4.3	5.1	3.4	4.2	2.8	3.6	2.3	3.2	2	2.9	31.3
1.5	*2*	HU15M3X	5.29	5	5.03	17.7	18.2	8.7	9.8	5.7	6.9	4.1	5.4	3.3	4.5	2.7	4	2.4	3.7	2.3	3.7	31.6
2.2	*3*	HU22M3X	7.56	5	7.2	17.1	18	8.5	9.6	5.5	6.7	4	5.2	3.1	4.3	2.5	3.7	2.1	3.4	2	3.3	30.7
3	–	HU30M3X	10.31	5	9.68	17.6	18.6	8.5	10	5.4	7.3	4	5.9	3.4	5.3	3.9	5.8	9.3	12.2	7.8	1	32.4
4	*5*	HU40M3X	13.45	5	12.73	16.9	18.3	8.2	9.9	5.2	6.9	3.7	5.4	3	4.7	3.2	4.7	7.4	10	6.1	0.8	31.1
5.5	*7.5*	HU55M3X	18.09	22	17.27	17.1	17.8	8.7	9.5	5.7	6.5	4.1	5	3.2	4.1	2.6	3.5	2.2	3.1	1.9	2.8	30.7
7.5	*10*	HU75M3X	24.36	22	23.22	17.1	18	8.6	9.6	5.6	6.7	4.1	5.2	3.2	4.3	2.6	3.7	2.3	3.3	2.1	3.2	30.8
11	*15*	HD11M3X	35.7	22	33.4	18	19	8.6	10	5.6	7.9	4.3	6.9	4.3	7.2	7.1	11.3	11.3	4.3	3.8	0.6	35.5
15	*20*	HD15M3X	47.6	22	44.92	16.9	18.6	8.1	10	5.1	7.5	3.7	6.3	3.3	6.2	5.3	9.9	9.9	3	2.9	0.8	33.3
18.5	*25*	HD18M3X	57.98	22	54.96	16.5	18.4	7.9	10	4.9	7.1	3.4	5.8	2.7	5.5	4	8.9	9	3	2.3	1.4	32
22	*30*	HD22M3X	69.01	22	65.08	16.3	18.8	7.6	10	4.6	7.8	3.2	7.1	3.8	11.2	12.2	4.9	2.7	1.8	1.5	1.3	35
30	*40*	HD30M3X	93.03	22	88.51	16	18.3	7.5	9.9	4.4	6.9	2.9	5.8	2.9	8.3	8.9	4.8	1.9	2.3	1.1	1.6	32.1

(1) Total current harmonic distortion.
(2) Maximum total conforming to standard IEC/EN 61000-3-12.
(3) Example of current harmonic levels up to harmonic order 49 for a 230 V 50 Hz supply with reduced capacitor technology.
(4) Total harmonic distortion conforming to standard IEC 61000-3-12.

Variable speed drives for asynchronous motors

Altivar 21

Reduction of current harmonics

Example of current harmonic levels for ATV 21H●●●N4 drives (1)

Motor power		For ATV 21 drives	Line supply		Current harmonic levels																	THD (2)
			Line current	Line Isc	H1	H5	H7	H11	H13	H17	H19	H23	H25	H29	H31	H35	H37	H41	H43	H47	H49	
kW	HP		A	kA	A	%	%	%	%	%	%	%	%	%	%	%	%	%	%	%	%	%
Three-phase supply voltage: 400 V 50 Hz																						
0.75	1	H075N4	1.64	5	1.55	19.2	18.3	9.4	9.9	6.1	6.8	4.5	5.3	3.6	4.4	3	3.8	2.6	3.4	2.3	3.1	32.8
1.5	2	HU15N4	3.03	5	2.89	17.5	17.8	8.8	9.5	5.8	6.5	4.3	5	3.4	4.1	2.8	3.5	2.3	3	2	2.7	30.9
2.2	3	HU22N4	4.33	5	4.14	17.2	17.7	8.7	9.4	5.7	6.4	4.2	4.9	3.3	4	2.7	3.3	2.2	2.9	1.9	2.6	30.5
3	–	HU30N4	5.83	5	5.56	17.4	18.1	8.6	9.7	5.6	6.8	4.1	5.3	3.2	4.4	2.6	3.8	2.3	3.5	2.1	3.4	31.2
4	5	HU40N4	7.66	5	7.3	17	17.9	8.5	9.6	5.5	6.6	4	5.1	3.1	4.2	2.5	3.6	2.1	3.3	1.9	3.1	30.6
5.5	7.5	HU55N4	10.4	22	9.93	17.2	17.6	8.8	9.3	5.8	6.3	4.3	4.8	3.4	3.9	2.8	3.3	2.3	2.8	2	2.5	30.5
7.5	10	HU75N4	13.98	22	13.34	17.3	17.9	8.7	9.5	5.7	6.5	4.2	5	3.3	4.1	2.7	3.5	2.3	3.1	2	2.8	30.9
11	15	HD11N4	20.13	22	19.23	17	17.7	8.7	9.4	5.7	6.4	4.2	4.9	3.2	4	2.6	3.3	2.2	2.9	1.9	2.6	30.4
15	20	HD15N4	27.14	22	25.83	17.1	18.1	8.5	9.7	5.5	6.8	4	5.3	3.1	4.4	2.6	3.9	2.3	3.6	2.4	3.6	30.9
18.5	25	HD18N4	33.17	22	31.61	16.8	18	8.4	9.6	5.5	6.7	3.9	5.1	3	4.2	2.5	3.7	2.2	3.4	2.2	3.4	30.5
22	30	HD22N4	39.38	22	37.45	16.8	18.1	8.3	9.8	5.3	6.8	3.8	5.3	2.9	4.5	2.5	4.1	2.6	4.2	4.2	5.7	30.7
30	40	HD30N4	53.18	22	50.7	16.6	17.9	8.2	9.6	5.2	6.5	3.7	5	2.8	4	2.2	3.5	2.1	3.4	3.3	5.3	30
37	50	HD37N4	65.57	22	62.24	16.5	18.1	8.1	9.7	5.1	6.6	3.6	5.1	2.8	4.2	3	4.2	8.5	9.5	4.2	0.9	30.3
45	60	HD45N4	79.97	22	76.14	16.3	18.1	8.1	9.7	5.1	6.6	3.6	5.1	2.8	4.3	2.9	4.3	7.5	6.9	3.5	0.5	30.2
55	75	HD55N4	99.3	22	94.36	16	18.9	7.8	10	5.2	8.1	5	7.7	8.7	4.8	4	0.2	1.9	0.9	1.2	0.9	32.7
75	100	HD75N4	137.3	22	131.07	15.4	18.9	7.5	10	4.9	7.6	4.4	6.7	7.3	3	3.1	0.6	1.5	0.9	0.9	0.8	31.1

Example of current harmonic levels for ATV 21W●●●N4 and W●●●N4C drives (1)

Three-phase supply voltage: 400 V 50 Hz

Motor power		For ATV 21 drives	Line supply		Current harmonic levels																	THD (2)
			Line current	Line Isc	H1	H5	H7	H11	H13	H17	H19	H23	H25	H29	H31	H35	H37	H41	H43	H47	H49	
kW	HP		A	kA	A	%	%	%	%	%	%	%	%	%	%	%	%	%	%	%	%	%
0.75	1	W075N4 W075N4C	1.64	5	1.55	19.2	18.3	9.4	9.9	6.1	6.8	4.5	5.3	3.6	4.4	3.0	3.8	2.6	3.4	2.3	3.1	32.8
1.5	2	WU15N4 WU15N4C	3.03	5	2.89	17.5	17.8	8.8	9.5	5.8	6.5	4.3	5.0	3.4	4.1	2.8	3.5	2.3	3.0	2.0	2.7	30.9
2.2	3	WU22N4 WU22N4C	4.33	5	4.14	17.2	17.7	8.7	9.4	5.7	6.4	4.2	4.9	3.3	4.0	2.7	3.3	2.2	2.9	1.9	2.6	30.5
3	–	WU30N4 WU30N4C	5.83	5	5.56	17.4	18.1	8.6	9.7	5.6	6.8	4.1	5.3	3.2	4.4	2.6	3.8	2.3	3.5	2.1	3.4	31.2
4	5	WU40N4 WU40N4C	7.66	5	7.30	17.0	17.9	8.5	9.6	5.5	6.6	4.0	5.1	3.1	4.2	2.5	3.6	2.1	3.3	1.9	3.1	30.6
5.5	7.5	WU55N4 WU55N4C	10.40	22	9.93	17.2	17.6	8.8	9.3	5.8	6.3	4.3	4.8	3.4	3.9	2.8	3.3	2.3	2.8	2.0	2.5	30.5
7.5	10	WU75N4 WU75N4C	13.98	22	13.34	17.3	17.9	8.7	9.5	5.7	6.5	4.2	5.0	3.3	4.1	2.7	3.5	2.3	3.1	2.0	2.8	30.9
11	15	WD11N4 WD11N4C	20.17	22	19.23	17.2	18.0	8.6	9.6	5.6	6.7	4.1	5.2	3.2	4.3	2.6	3.7	2.3	3.3	2.1	3.1	30.9
15	20	WD15N4 WD15N4C	27.07	22	25.85	16.9	17.8	8.5	9.5	5.6	6.5	4.0	5.0	3.1	4.1	2.5	3.5	2.1	3.1	1.9	2.8	30.4
18.5	25	WD18N4 WD18N4C	33.22	22	31.62	16.9	18.0	8.4	9.7	5.4	6.7	3.9	5.2	3.0	4.4	2.5	3.8	2.3	3.6	2.6	3.8	30.7
22	30	WD22N4 WD22N4C	39.38	22	37.45	16.8	18.1	8.3	9.8	5.3	6.8	3.8	5.3	2.9	4.5	2.5	4.1	2.6	4.2	4.2	5.7	30.7
30	40	WD30N4 WD30N4C	53.18	22	50.70	16.6	17.9	8.2	9.6	5.2	6.5	3.7	5.0	2.8	4.0	2.2	3.5	2.1	3.4	3.3	5.3	30.0
37	50	WD37N4 WD37N4C	65.57	22	62.24	16.5	18.1	8.1	9.7	5.1	6.6	3.6	5.1	2.8	4.2	3.0	4.2	8.5	9.5	4.2	0.9	30.3
45	60	WD45N4 WD45N4C	79.97	22	76.14	16.3	18.1	8.1	9.7	5.1	6.6	3.6	5.1	2.8	4.3	2.9	4.3	7.5	6.9	3.5	0.5	30.2
55	75	WD55N4 WD55N4C	99.30	22	94.36	16.0	18.9	7.8	10.0	5.2	8.1	5.0	7.7	8.7	4.8	4.0	0.2	1.9	0.9	1.2	0.9	32.7
75	100	WD75N4 WD75N4C	137.30	22	131.07	15.4	18.9	7.5	10.0	4.9	7.6	4.4	6.7	7.3	3.0	3.1	0.6	1.5	0.9	0.9	0.8	31.1

(1) Example of current harmonic levels up to harmonic order 49 for a 400 V 50 Hz supply with reduced capacitor technology.
(2) Total harmonic distortion conforming to standard IEC/EN 61000-3-12.

Variable speed drives for asynchronous motors
Altivar 21

Torque characteristics (typical curves)

The curves below define the available continuous torque and transient overtorque for both force-cooled and self-cooled motors. The only difference is in the ability of the motor to provide a high continuous torque at less than half the nominal speed.

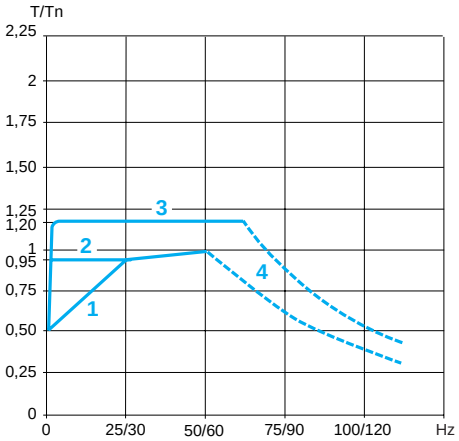

Open loop applications

Open loop applications

1 Self-cooled motor: continuous useful torque *(1)*
2 Force-cooled motor: continuous useful torque
3 Overtorque for 60 seconds maximum
4 Torque in overspeed at constant power *(2)*

Motor thermal protection

Altivar 21 drives feature thermal protection designed specifically for self-cooled or forced-cooled variable speed motors.

This motor thermal protection is designed for a maximum ambient temperature of 40°C around the motor. If the temperature around the motor exceeds 40°C, thermal protection should be provided directly by thermistor probes (PTC) integrated in the motor. The probes are managed directly by the drive.

(1) For power ratings ⩽250 W, motor derating is 20% instead of 50% at very low frequencies.
(2) The motor nominal frequency and the maximum output frequency can be adjusted from 10 to 200 Hz.
Check the mechanical overspeed characteristics of the selected motor with the manufacturer.

ARCO CONTROL
:051-37133855-6
:09014284236
WWW.ARCOKALA.COM

Variable speed drives for asynchronous motors
Altivar 21

Special uses

Using Altivar 21 drives with synchronous motors

Altivar 21 drives are also suitable for powering synchronous motors (sinusoidal electromotive force) in open loop mode and are used to achieve performance levels comparable to those associated with an asynchronous motor in sensorless flux vector control.
This drive/motor combination makes it possible to obtain remarkable speed accuracy and maximum torque even at zero speed. The design and construction of synchronous motors are such that they offer enhanced power density and high-speed performance in a compact unit. Drive control for synchronous motors does not cause stalling.

Connecting motors in parallel

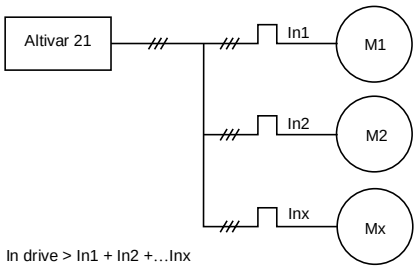

In drive > In1 + In2 +…Inx

Connecting motors in parallel

One of the following motor control ratios must be used in order to connect motors in parallel:
- Quadratic voltage/frequency ratio
- Constant voltage/frequency ratio
- Constant voltage/frequency ratio with automatic IR compensation

The nominal current of the drive must be greater than or equal to the sum of the currents of the motors to be controlled.
In this case, provide external thermal protection for each motor using probe or thermal overload relays. For cable runs over a certain length, taking account of all the tap links, it is advisable either to install an output filter between the drive and the motors.

If several motors are used in parallel, there are two possible scenarios:
- The motors have equal power ratings, in which case the torque characteristics will remain optimized after the drive has been configured
- The motors have different power ratings, in which case the torque characteristics will not be optimized for all the motors

Switching the motor at the drive output

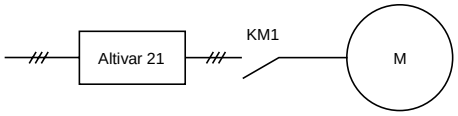

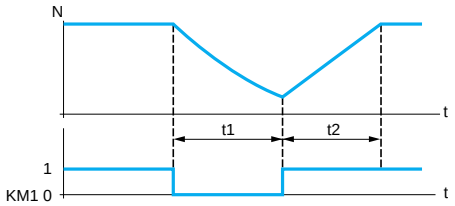

KM1: Output contactor
t1: Deceleration without ramp (freewheel)
t2: Acceleration with ramp
N: Speed

Example of loss of output contactor

The drive can be switched when locked or unlocked. If the drive is switched on-the-fly (drive unlocked), the motor is controlled and accelerates until it reaches the reference speed smoothly following the acceleration ramp. This use requires configuration of the automatic catching a spinning load ("catch on the fly") and the motor phase loss on output cut functions.

Typical applications:
- Loss of safety circuit at drive output
- Bypass function
- Switching of motors connected in parallel

Test on a low power motor or without a motor

In a testing or maintenance environment the drive can be checked without having to switch to a motor with the same rating as the drive (particularly useful in the case of high power drives). This use requires deactivation of motor phase loss function.

Variable speed drives for asynchronous motors

Altivar 21

UL Type 1/IP 20 drives

ATV 21H075M3X

ATV 21HU75N4

ATV 21HD75N4

UL Type 1/IP 20 drives without EMC filter

Motor		Line supply				Altivar 21			
Power indicated on plate (1)		Line current (2)		Apparent power	Maximum prospective line Isc	Max. continuous current (1)	Max. transient current for 60 s	Reference	Weight
		200 V	240 V	240 V		230 V			
kW	HP	A	A	kVA	kA	A	A		kg
Three phase supply voltage: 200…240 V 50/60 Hz									
0.75	1	3.3	2.7	1.8	5	4.6	5.1	**ATV 21H075M3X**	1.800
1.5	2	6.1	5.1	2.9	5	7.5	8.3	**ATV 21HU15M3X**	1.800
2.2	3	8.7	7.3	4.0	5	10.6	11.7	**ATV 21HU22M3X**	1.800
3	–	11.9	10.0	5.2	5	13.7	15.1	**ATV 21HU30M3X**	3.050
4	5	15.7	13.0	6.7	5	17.5	19.3	**ATV 21HU40M3X**	3.050
5.5	7.5	20.8	17.3	9.2	22	24.2	26.6	**ATV 21HU55M3X**	6.100
7.5	10	27.9	23.3	12.2	22	32.0	35.2	**ATV 21HU75M3X**	6.100
11	15	42.1	34.4	17.6	22	46.2	50.8	**ATV 21HD11M3X**	11.550
15	20	56.1	45.5	23.2	22	61	67.1	**ATV 21HD15M3X**	11.550
18.5	25	67.3	55.8	28.5	22	74.8	82.3	**ATV 21HD18M3X**	11.550
22	30	80.4	66.4	33.5	22	88	96.8	**ATV 21HD22M3X**	27.400
30	40	113.3	89.5	44.6	22	117	128.7	**ATV 21HD30M3X**	38.650

IP 20/UL Type 1 drives with an integrated class A EMC filter

Motor		Line supply				Altivar 21			
Power indicated on plate (1)		Line current (2)		Apparent power	Maximum prospective line Isc	Max. continuous current (1)	Max. transient current for 60 s	Reference	Weight
		380 V	480 V	380 V		380 V/460 V			
kW	HP	A	A	kVA	kA	A	A		kg
Three phase supply voltage: 380…480 V 50/60 Hz									
0.75	1	1.7	1.4	1.6	5	2.2	2.4	**ATV 21H075N4**	2.000
1.5	2	3.2	2.5	2.8	5	3.7	4	**ATV 21HU15N4**	2.000
2.2	3	4.6	3.6	3.9	5	5.1	5.6	**ATV 21HU22N4**	2.000
3	–	6.2	4.9	5.5	5	7.2	7.9	**ATV 21HU30N4**	3.350
4	5	8.1	6.4	6.9	5	9.1	10	**ATV 21HU40N4**	3.350
5.5	7.5	10.9	8.6	9.1	22	12	13.2	**ATV 21HU55N4**	3.350
7.5	10	14.7	11.7	12.2	22	16	17.6	**ATV 21HU75N4**	6.450
11	15	21.1	16.8	17.1	22	22.5	24.8	**ATV 21HD11N4**	6.450
15	20	28.5	22.8	23.2	22	30.5	33.6	**ATV 21HD15N4**	11.650
18.5	25	34.8	27.8	28.2	22	37	40.7	**ATV 21HD18N4**	11.650
22	30	41.6	33.1	33.2	22	43.5	47.9	**ATV 21HD22N4**	26.400
30	40	56.7	44.7	44.6	22	58.5	64.4	**ATV 21HD30N4**	26.400
37	50	68.9	54.4	52	22	79	86.9	**ATV 21HD37N4**	38.100
45	60	83.8	65.9	61.9	22	94	103.4	**ATV 21HD45N4**	38.100
55	75	102.7	89	76.3	22	116	127.6	**ATV 21HD55N4**	55.400
75	100	141.8	111.3	105.3	22	160	176	**ATV 21HD75N4**	55.400

(1) These values are given for a nominal frequency switching of 12 kHz up to ATV 21HD15M3X and up to ATV 21HD15N4 or 8 kHz for ATV 21HD18M3X…HD30M3X and ATV 21HD18N4...HD75N4 drives for use in continuous operation.
The switching frequency is adjustable from 6…16 kHz for all ratings.
Above 8 or 12 kHz, depending on the rating, the drive reduces the switching frequency itself in the event of an excessive temperature rise. For continuous operation above the nominal switching frequency, derate the nominal drive current (see derating curves on pages 39 to 43).
(2) Typical value for the indicated motor power and for the maximum prospective line Isc.

ARCO CONTROL
:051-37133855-6
:09014284236
WWW.ARCOKALA.COM

Variable speed drives for asynchronous motors

Altivar 21

IP 54 drives

PF106476-26-M

ATV 21W075N4

IP 54 drives with an integrated class A EMC filter

Motor		Line supply				Altivar 21			
Power indicated on plate (1)		Line current (2)		Apparent power	Maximum prospective line Isc	Max. continuous current (1)	Max. transient current for 60 s	Reference	Weight
		380 V	480 V	380 V		380 V/460 V			
kW	HP	A	A	kVA	kA	A	A		kg
Three phase supply voltage: 380…480 V 50/60 Hz									
0.75	1	1.7	1.4	1.6	5	2.2	2.4	**ATV 21W075N4**	7.000
1.5	2	3.2	2.5	2.8	5	3.7	4	**ATV 21WU15N4**	7.000
2.2	3	4.6	3.6	3.9	5	5.1	5.6	**ATV 21WU22N4**	7.000
3	–	6.2	4.9	5.5	5	7.2	7.9	**ATV 21WU30N4**	9.650
4	5	8.1	6.4	6.9	5	9.1	10	**ATV 21WU40N4**	9.650
5.5	7.5	10.9	8.6	9.1	22	12	13.2	**ATV 21WU55N4**	9.650
7.5	10	14.7	11.7	12.2	22	16	17.6	**ATV 21WU75N4**	10.950
11	15	21.2	16.9	17.1	22	22.5	24.8	**ATV 21WD11N4**	30.300
15	20	28.4	22.6	23.2	22	30.5	33.6	**ATV 21WD15N4**	30.300
18.5	25	34.9	27.8	28.2	22	37	40.7	**ATV 21WD18N4**	37.400
22	30	41.6	33.1	33.2	22	43.5	47.9	**ATV 21WD22N4**	49.500
30	40	56.7	44.7	44.6	22	58.5	64.4	**ATV 21WD30N4**	49.500
37	50	68.9	54.4	52	22	79	86.9	**ATV 21WD37N4**	57.400
45	60	83.8	65.9	61.9	22	94	103.4	**ATV 21WD45N4**	57.400
55	75	102.7	89	76.3	22	116	127.6	**ATV 21WD55N4**	61.900
75	100	141.8	111.3	105.3	22	160	176	**ATV 21WD75N4**	61.900

PF106483-32-M

ATV 21WD18N4C

IP 54 drives with an integrated class B EMC filter

Motor		Line supply				Altivar 21			
Power indicated on plate (1)		Line current (2)		Apparent power	Maximum prospective line Isc	Max. continuous current (1)	Max. transient current for 60 s	Reference	Weight
		380 V	480 V	380 V		380 V/460 V			
kW	HP	A	A	kVA	kA	A	A		kg
Three phase supply voltage: 380…480 V 50/60 Hz									
0.75	1	1.7	1.4	1.6	5	2.2	2.4	**ATV 21W075N4C**	7.500
1.5	2	3.2	2.6	2.8	5	3.7	4	**ATV 21WU15N4C**	7.500
2.2	3	4.6	3.7	3.9	5	5.1	5.6	**ATV 21WU22N4C**	7.500
3	–	6.2	5	5.5	5	7.2	7.9	**ATV 21WU30N4C**	10.550
4	5	8.2	6.5	6.9	5	9.1	10	**ATV 21WU40N4C**	10.550
5.5	7.5	11	8.7	9.1	22	12	13.2	**ATV 21WU55N4C**	10.550
7.5	10	14.7	11.7	12.2	22	16	17.6	**ATV 21WU75N4C**	11.850
11	15	21.1	16.7	17.1	22	22.5	24.8	**ATV 21WD11N4C**	36.500
15	20	28.4	22.8	23.2	22	30.5	33.6	**ATV 21WD15N4C**	36.500
18.5	25	34.5	27.6	23.2	22	37	40.7	**ATV 21WD18N4C**	45.000
22	30	41.1	33.1	33.2	22	43.5	47.9	**ATV 21WD22N4C**	58.500
30	40	58.2	44.4	44.6	22	58.5	64.4	**ATV 21WD30N4C**	58.500
37	50	68.9	54.4	52	22	79	86.9	**ATV 21WD37N4C**	77.400
45	60	83.8	65.9	61.9	22	94	103.4	**ATV 21WD45N4C**	77.400
55	75	102.7	89	76.3	22	116	127.6	**ATV 21WD55N4C**	88.400
75	100	141.8	111.3	105.3	22	160	176	**ATV 21WD75N4C**	88.400

(1) These values are given for a nominal frequency switching of 12 kHz up to ATV 21WD15N4 and up to ATV 21WD15N4C or 8 kHz for ATV 21WD18N4…WD75N4 and ATV 21WD18N4C...WD75N4C drives for use in continuous operation.
The switching frequency is adjustable from 6…16 kHz for all ratings.
Above 8 or 12 kHz, depending on the rating, the drive reduces the switching frequency itself in the event of an excessive temperature rise. For continuous operation above the nominal switching frequency, derate the nominal drive current (see derating curves on pages 44 to 45).
(2) Typical value for the indicated motor power and for the maximum prospective line Isc.

Variable speed drives for asynchronous motors

Altivar 21

Option: dialogue accessories

DF536067

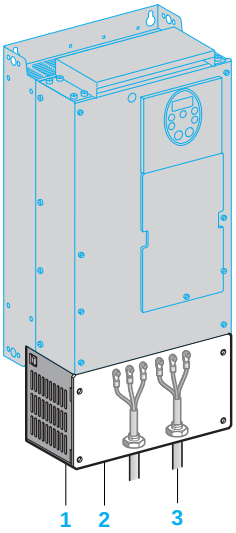

UL Type 1 conformity kit

Kit for UL Type 1 conformity (mounting outside the enclosure)

When the drive is mounted directly on a wall outside the enclosure, this kit can be used to ensure UL Type 1 conformity when connecting the cables with a tube.
The shielding is connected inside the kit.

The kit consists of:
- All the mechanical parts 1 including a pre-cut plate 2 for connecting the tubes 3
- Fixing accessories
- A manual

References

For drives	Reference	Weight kg
ATV 21H075M3X...HU22M3X ATV 21H075N4...HU22N4	**VW3 A31 814**	0.500
ATV 21HU30M3X, HU40M3X ATV 21HU30N4...HU55N4	**VW3 A31 815**	0.500
ATV 21HU55M3X, HU75M3X ATV 21HU75N4, HD11N4	**VW3 A31 816**	0.900
ATV 21HD11M3X...HD18M3X ATV 21HD15N4, HD18N4	**VW3 A31 817**	1.200
ATV 21HD22M3X ATV 21HD22N4, HD30N4	**VW3 A9 206**	4.000
ATV 21HD37N4, HD45N4	**VW3 A9 207**	5.000
ATV 21HD30M3X ATV 21HD55N4, HD75N4	**VW3 A9 208**	7.000

Kit for mounting on ⊥ rail

This kit allows easy installation of the ATV 21H075M3X...HU22M3X and ATV 21H075N4...HU22N4 drives by mounting them directly on a 35 mm wide ⊥ rail.

Reference

For drives	Reference	Weight kg
ATV 21H075M3X...HU22M3X ATV 21H075N4...HU22N4	**VW3 A31 852**	0.350

DF536065

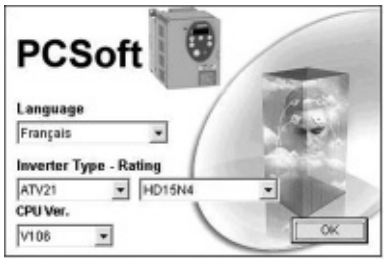

PCSoft software workshop

PCSoft software workshop

This PC software workshop is a user-friendly tool for setting up Altivar 21 drives.

It includes different functions such as:
- Configuration preparation
- Setup
- Maintenance

It can be downloaded free of charge from the Internet at “www.telemecanique.com”.
It operates in the following PC environments and configurations:
- Microsoft Windows® 98, Microsoft Windows® 2000, Microsoft Windows® XP
- Pentium® 233 MHz or higher, hard disk with 10 MB available, 32 MB RAM
- 256 colour, 640 x 480 pixels or higher definition monitor

DF536066

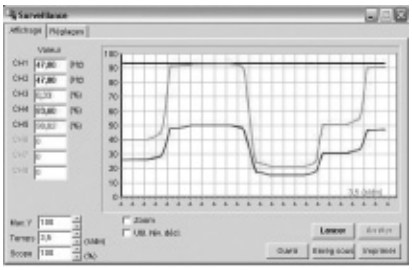

PCSoft software workshop “Monitoring” function

Connection

The PCSoft software workshop must be connected directly to the Modbus port on the drive using the PC serial port connection kit.

Note: *It is not possible to use the PCSoft software workshop and a communication option card simultaneously. To be able to use the PCSoft software workshop when the drive is equipped with a communication card, the network or communication bus must be deactivated.*

Reference

Description	Composition	Reference	Weight kg
PC serial port connection kit for point-to-point Modbus connection	■ 1 x 3 m cable with 2 RJ45 connectors ■ 1 RS 232/RS 485 converter with one 9-way female SUB-D connector and 1 RJ45 connector	**VW3 A8 106**	0.350

Dimensions:
pages 28 and 29

Variable speed drives for asynchronous motors

Altivar 21

Option: dialogue

DF533006

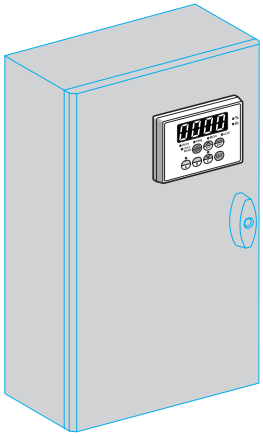

Terminal on enclosure door

Remote display terminal

The Altivar 21 drive can be connected to a remote display terminal.
The display terminal can be mounted on the door of an enclosure with IP 50 protection on the front panel. The maximum operating temperature is 40°C.

Two types of operation are available:
■ REMOTE KEYPAD MODE: This provides access to the same functions as the integrated 7-segment terminal and can be used:
□ To control, adjust and configure the drive remotely
□ For remote display
■ COPY MODE: Configurations can be stored and downloaded (three configuration files can be stored).

Depending on the operating mode selected, the following keys have different functions:
■ ∧/SFT
■ MODE/ESC
■ RUN/A
■ STOP/B
■ ∨/C

Note: *It is not possible to use the remote display terminal and a communication option card simultaneously. To be able to use the remote display terminal when the drive is equipped with a communication card, the network or communication bus must be deactivated.*

Front panel of the remote display terminal

Description

1 Display:
□ Four 7-segment displays visible at 5 m
□ Display of numeric values and codes
□ The display flashes when a value is stored
□ Unit rating of displayed value
□ The display flashes to indicate a fault on the drive
2 Display of drive status:
□ RUN: Run command is active or speed reference present
□ PRG: Drive in automatic mode
□ MON: Drive in monitoring mode
□ LOC: Drive in local mode
□ COPY MODE: COPY MODE selected
3 Use of keys:
□ LOC/REM: Switching of the drive command, locally or remotely
As a “local” command, the speed reference can be modified using the ∧ and ∨ keys; the LED located between these keys lights up.
□ ∧/SFT, depending on the operating mode selected:
- Vertical navigation in the menu or editing of values
- Access to functions for managing parameters (copy, comparison, protection) or to display terminal memories
□ MODE/ESC, depending on the operating mode selected:
- To adjust and program drive parameters, access to monitoring mode
- To abort a value or parameter to return to the previous state
□ RUN/A, depending on the operating mode selected:
- Local motor run command; LED indicates that the RUN key is active
- Copy terminal memory “A”
□ STOP/B, depending on the operating mode selected:
- Local control of motor stopping/drive fault clearing
- Copy terminal memory “B”
□ ∨/C, depending on the operating mode selected:
- Vertical navigation in the menu or editing of values
- Copy terminal memory “C”
□ ENT: Saves the current value or the selected function

Reference

Description	Reference	Weight kg
Remote display terminal Supplied with: ■ 1 x 3.6 m cable with 2 RJ45 connectors ■ Seal and screws for IP 50 mounting on an enclosure door	**VW3 A21 101**	0.250

ARCO CONTROL
:051-37133855-6
:09014284236
WWW.ARCOKALA.COM

Dimensions:
page 29

Variable speed drives for asynchronous motors

Altivar 21

Communication buses and networks

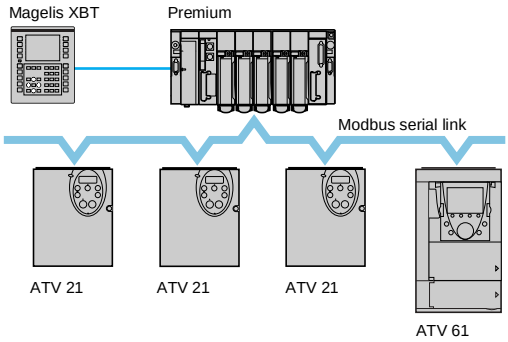

Example of configuration on the Modbus serial link

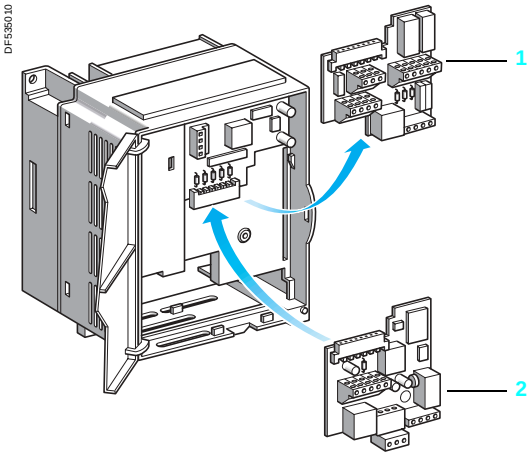

Presentation

The Altivar 21 drive is designed to suit the configurations found in communicating installations created for buildings.

It includes the Modbus communication protocol as standard *(1)*.

The RJ45 Modbus port is located on the drive's control terminals. It is assigned to control and signaling by a PLC or by another type of controller.
It is also used to connect:
- The remote terminal
- A Magelis industrial HMI terminal

By substituting the I/O terminals 1 with one of the 4 communication cards 2 available as an option, the Altivar 21 drive can also be connected to other networks and communication buses in operation in the building (HVAC) *(2)*.
Each communication card contains I/O terminals.

Communication cards for building applications (HVAC):
- LonWorks
- METASYS N2
- APOGEE FLN
- BACnet

Note: *Connection to a network or communication bus via one of the four communication cards is incompatible with the use of the PCSoft software workshop or the remote display terminal. To be able to use the PCSoft software workshop or the remote display terminal, the network or communication bus must be deactivated. See pages 18 and 19.*

(1) Modbus communication protocol characteristics (see page 11)
(2) Heating Ventilation & Air Conditioning

Variable speed drives for asynchronous motors

Altivar 21

Communication buses and networks

Functions

All the drive functions can be accessed via the network:
- Control
- Monitoring
- Adjustment
- Configuration

The speed command and reference may come from different control sources:
- I/O terminals
- Communication network
- Remote display terminal

The advanced functions of the Altivar 21 drive can be used to manage switching of these drive control sources according to the application requirements.

Communication is monitored according to criteria specific to each protocol.
The response of the drive in the event of a communication fault can be configured:
- Freewheel stop, stop on ramp or braked stop
- Maintain the last command received
- Ignore the fault

Presentation: page 20
Characteristics: pages 11 and 22
References: page 23

Variable speed drives for asynchronous motors

Altivar 21

Communication buses and networks

Characteristics of the VW3 A21 312 LonWorks card		
Structure	Connector	1 removable 3-way screw terminal
	Topology	TP/FT-10 (free topology)
	Transmission speed	78 kbps
Services	Functional profiles	LonMark 6010: Variable Speed Motor Drive LonMark 0000: Node Object
Diagnostics	Using LEDs	1 LED on the card: Service
	Using the graphic display terminal	Control word received Reference received
Description file		An xif file is supplied on the documentation CD-ROM or can be downloaded from the Internet at “www.telemecanique.com”.
Characteristics of the VW3 A21 313 METASYS N2 card		
Structure	Connector	1 removable 4-way screw terminal
Diagnostics	Using LEDs	1 LED on the card: “COM” (network traffic)
	Using the graphic display terminal	Control word received Reference received
Characteristics of the VW3 A21 314 APOGEE FLN card		
Structure	Connector	1 removable 4-way screw terminal
Diagnostics	Using LEDs	1 LED on the card: “COM” (network traffic)
	Using the graphic display terminal	Control word received Reference received
Characteristics of the VW3 A21 315 BACnet card		
Structure	Connector	1 removable 4-way screw terminal
Diagnostics	Using LEDs	1 LED on the card: “COM” (network traffic)
	Using the graphic display terminal	Control word received Reference received

Variable speed drives for asynchronous motors

Altivar 21

Communication buses and networks

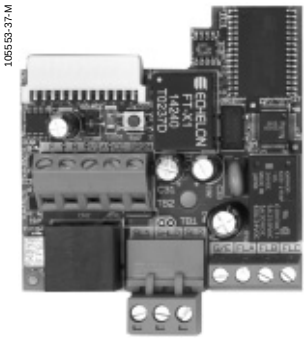

VW3 A21 312

Communication cards *(1) (2)*

Description	Use	Reference	Weight kg
LonWorks	The card is equipped with a removable 3-way screw terminal block	**VW3 A21 312**	0.200
METASYS N2	The card is equipped with a removable 4-way screw terminal block	**VW3 A21 313**	0.200
APOGEE FLN	The card is equipped with a removable 4-way screw terminal block	**VW3 A21 314**	0.200
BACnet	The card is equipped with a removable 4-way screw terminal block	**VW3 A21 315**	0.200

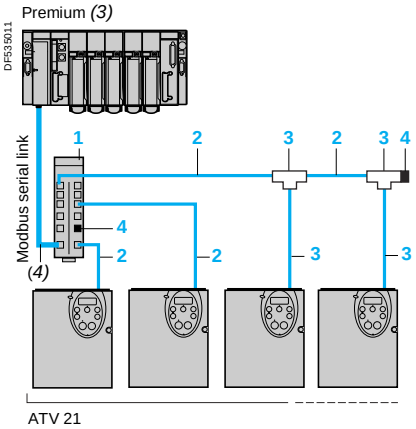

Example of Modbus diagram, connections via splitter blocks and RJ45 connectors

Connection accessories

Description	Item no.	Length m	Unit reference	Weight kg
Modbus serial link				
Modbus splitter block 10 RJ45 connectors and 1 screw terminal block	1	–	**LU9 GC3**	0.500
Cables for Modbus serial link equipped with 2 RJ45 connectors	2	0.3	**VW3 A8 306 R03**	0.025
		1	**VW3 A8 306 R10**	0.060
		3	**VW3 A8 306 R30**	0.130
Modbus T-junction boxes (with integrated cable)	3	0.3	**VW3 A8 306 TF03**	–
		1	**VW3 A8 306 TF10**	–
Line terminator For RJ45 connector *(5)*	4	–	**VW3 A8 306 RC**	0.010

(1) The Altivar 21 drive can only take one communication card.
(2) The user manuals are supplied on CD-ROM or can be downloaded from the Internet at "www.telemecanique.com". The description file for the LonWorks communication card is also supplied on CD-ROM in xif format or can be downloaded from the Internet at "www.telemecanique.com".
(3) Please refer to the "Automation platform Modicon Premium and Unity - PL7 software" and "Automation platform Modicon TSX Micro and PL7 software" catalogues.
(4) Cable depending on the type of controller or PLC.
(5) Order in multiples of 2.

ARCO CONTROL
:051-37133855-6
:09014284236
WWW.ARCOKALA.COM

Presentation: page 20
Functions: page 21
Characteristics: pages 11 and 22

Variable speed drives for asynchronous motors

Altivar 21: EMC filters

Optional integrated filters and additional filters

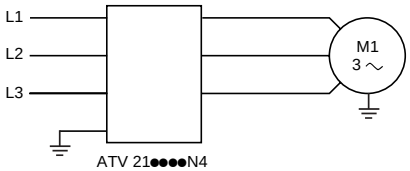

ATV 21●●●●N4
ATV 21W●●●N4C
with integrated filter

Integrated EMC filters

Altivar 21 drives, except for the ATV 21H●●●M3X, have built-in radio interference input filters to meet the requirements of the EMC standard for variable speed electrical power drive "products" IEC/EN 61800-3, edition 2, categories C1, C2 or C3 in environment 1 or 2 and to comply with the European directive on EMC (electromagnetic compatibility).

Drives	Maximum length of shielded cable *(1)* according to		Leakage current *(2)*
	EN 55011 class A Gr1 *(3)* IEC/EN 61800-3 *(3)*	EN 55011 class B Gr1 *(3)* IEC/EN 61800-3 *(3)*	
	m	m	mA
UL Type 1/IP 20 drives			
ATV 21H075N4…HU22N4	20	–	4.5
ATV 21HU30N4…HU55N4	5	–	5.8
ATV 21HU75N4, HD11N4	5	–	2.9
ATV 21HD15N4, HD18N4	5	–	4.8
ATV 21HD22N4, HD30N4	5	–	25.3
ATV 21HD37N4, HD45N4	20	–	21.5
ATV 21HD55N4, HD75N4	100	–	9.1
IP 54 drives			
ATV 21W075N4…WU22N4	5	–	4.5
ATV 21WU30N4…WU55N4	5	–	5.8
ATV 21WU75N4	5	–	2.9
ATV 21WD11N4, WD15N4	5	–	13.3
ATV 21WD18N4	5	–	9.4
ATV 21WD22N4, WD30N4	5	–	25.3
ATV 21WD37N4, WD45N4	20	–	21.5
ATV 21WD55N4, WD75N4	100	–	9.1
ATV 21W075N4C…WU22N4C	–	20	18,4
ATV 21WU30N4C…WU55N4C	–	20	42.8
ATV 21WU75N4C	–	20	37.2
ATV 21WD11N4C, WD15N4C	–	20	81
ATV 21WD18N4C	–	20	77.2
ATV 21WD22N4C, WD30N4C	–	20	84.5
ATV 21WD37N4C, WD45N4C	–	20	53.6
ATV 21WD55N4C, WD75N4C	–	20	56.9

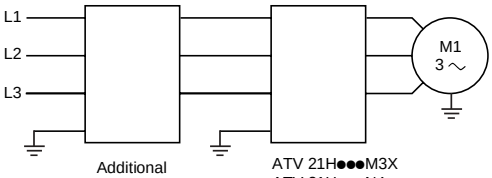

Additional
EMC filter

ATV 21H●●●M3X
ATV 21H●●●N4

Additional EMC input filters

Applications

Additional EMC input filters can be used to meet more stringent requirements and are designed to cut down conducted emissions on the line supply below the limits of standards EN 55011 group 1, class A or B and IEC/EN 61800-3 category C1, C2 or C3 (see page 6).
The additional EMC filters can be mounted beside or under the device. They act as a support for the drives and are attached to them via tapped holes.

Use according to the type of line supply

Use of these additional filters is only possible on TN (neutral connection) and TT (neutral to earth) type networks.

Standard IEC/EN 61800-3, appendix D2.1, states that on IT networks (isolated or impedance earthed neutral), filters can cause permanent insulation monitors to operate in a random manner.
In addition, the effectiveness of additional filters on this type of network depends on the type of impedance between neutral and earth, and therefore cannot be predicted.
In the case of a machine which needs to be installed on an IT network, the solution would be to insert an isolation transformer and place the machine locally on a TN or TT network.

(1) Maximum lengths for shielded cables connecting motors to drives for a switching frequency of 6 to 16 kHz. If motors are connected in parallel, it is the total length that should be taken into account.
(2) Maximum earth leakage current at 480 V 60 Hz on a TT network.
(3) See page 6.

Variable speed drives for asynchronous motors

Altivar 21: EMC filters

Option: additional input filters

General characteristics

EMC filter type			VW3 A31 404, 406…409	VW3 A4 406…408
Conformity to standards			EN 133200	
Degree of protection			IP 20 and IP 41 on upper part	
Maximum relative humidity			93% without condensation or dripping water conforming to IEC 68-2-3	
Ambient air temperature around the unit	Operation	°C	-10…+60	-10…+50
	Storage	°C	-25…+70	-40…+65
Maximum operating altitude		m	1000 without derating. 1000…3000 derating the current by 1% per additional 100 m. Limited to 2000 m for the "Corner Grounded" distribution network.	
Vibration resistance			1.5 mm peak to peak from 3…13 Hz, 1 gn peak from 13…150 Hz, in accordance with IEC 60068-2-6	
Shock resistance			15 gn for 11 ms conforming to IEC/EN 60068-2-27	
Maximum nominal voltage	50/60 Hz three-phase	V	240 +10% 480 +10%	

Connection characteristics

Maximum wire size and tightening torque	VW3 A31 404, 406		10 mm² (AWG 6) 1.8 Nm
	VW3 A31 407…409		25 mm² (AWG 2) 4.5 Nm
	VW3 A4 406, 407		50 mm² (AWG 0) 6 Nm
	VW3 A4 408		150 mm² (300 kcmil) 25 Nm

References

VW3 A31 406

For drives	Maximum length of shielded cable *(1)* according to EN 55011 class A Gr1 *(5)* IEC/EN 61800-3 *(5)*	Maximum length of shielded cable *(1)* according to EN 55011 class B Gr1 *(5)* IEC/EN 61800-3 *(5)*	In *(2)*	Il *(3)*	Loss *(4)*	Reference	Weight
	m	m	A	mA	W		kg
Three-phase supply voltage: 200…240 V 50/60 Hz							
ATV 21H075M3X	20	20	15	6.7	0.47	**VW3 A31 404**	1.000
ATV 21HU15M3X	20	20	15	6.7	1.6	**VW3 A31 404**	1.000
ATV 21HU22M3X	20	20	15	6.7	3.3	**VW3 A31 404**	1.000
ATV 21HU30M3X	20	20	25	17.8	3.6	**VW3 A31 406**	1.650
ATV 21HU40M3X	20	20	25	17.8	6.2	**VW3 A31 406**	1.650
ATV 21HU55M3X	20	–	47	20.6	3.7	**VW3 A31 407**	3.150
ATV 21HU75M3X	20	–	47	20.6	6.8	**VW3 A31 407**	3.150
ATV 21HD11M3X	20	–	83	14.5	9.1	**VW3 A31 408**	5.300
ATV 21HD15M3X	20	–	83	14.5	16	**VW3 A31 408**	5.300
ATV 21HD18M3X	20	–	83	14.5	23.1	**VW3 A31 408**	5.300
ATV 21HD22M3X	100	–	90	40.6	27.1	**VW3 A4 406**	15.000
ATV 21HD30M3X	20	–	180	86.3	23.1	**VW3 A4 408**	40.000
Three-phase supply voltage: 380…480 V 50/60 Hz							
ATV 21H075N4	20	20	15	13.8	0.13	**VW3 A31 404**	1.000
ATV 21HU15N4	20	20	15	13.8	0.45	**VW3 A31 404**	1.000
ATV 21HU22N4	20	20	25	13.8	0.9	**VW3 A31 404**	1.000
ATV 21HU30N4	20	20	25	37	1	**VW3 A31 406**	1.650
ATV 21HU40N4	20	20	25	37	1.6	**VW3 A31 406**	1.650
ATV 21HU55N4	20	20	25	37	3	**VW3 A31 406**	1.650
ATV 21HU75N4	20	20	47	42.8	1.9	**VW3 A31 407**	3.150
ATV 21HD11N4	20	20	47	42.8	3.9	**VW3 A31 407**	3.150
ATV 21HD15N4	20	20	49	42.8	9.2	**VW3 A31 409**	4.750
ATV 21HD18N4	20	20	49	42.8	13.8	**VW3 A31 409**	4.750
ATV 21HD22N4	100	–	90	84.5	7.3	**VW3 A4 406**	15.000
ATV 21HD30N4	100	–	90	84.5	13.5	**VW3 A4 406**	15.000
ATV 21HD37N4	100	100	92	106	16	**VW3 A4 407**	17.000
ATV 21HD45N4	100	100	92	106	23	**VW3 A4 407**	17.000
ATV 21HD55N4	100	100	180	193	18	**VW3 A4 408**	40.000
ATV 21HD75N4	100	100	180	193	34	**VW3 A4 408**	40.000

(1) The filter selection tables give the maximum lengths for shielded cables connecting motors to drives for a switching frequency of 6 to 16 kHz. These limits are given as examples only as they vary depending on the stray capacitance of the motors and the cables used. If motors are connected in parallel, it is the total length that should be taken into account.
(2) Filter nominal current.
(3) Maximum earth leakage current at 230 V and at 480 V 60 Hz on a TT network.
(4) Via thermal dissipation.
(5) See page 6.

Presentation: page 24
Dimensions: page 29
Schemes: page 31

Variable speed drives for asynchronous motors

Altivar 21

UL Type 1/IP 20 drives

ATV 21H075M3X…HU40M3X, ATV 21H075N4…HU55N4

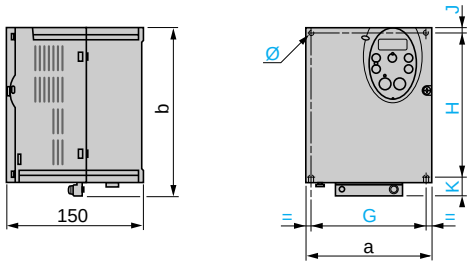

Plate for EMC mounting (supplied with the drive)

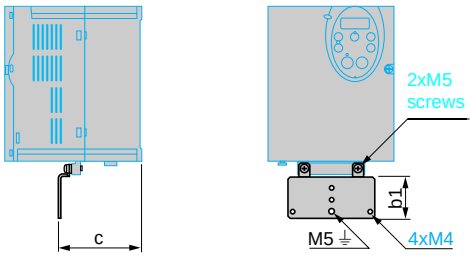

ATV 21H	a	b	b1	c	G	H	J	K	Ø
075M3X…U22M3X 075N4…U22N4	107	143	49	67.3	93	121.5	5	16.5	2xØ5
U30M3X, U40M3X U30N4…U55N4	142	184	48	88.8	126	157	6.5	20.5	4xØ5

ATV 21HU55M3X, HU75M3X, ATV 21HU75N4, HD11N4

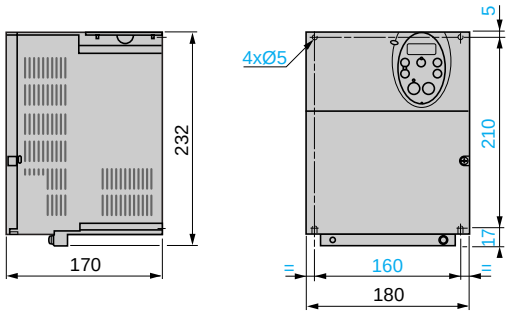

Plate for EMC mounting (supplied with the drive)

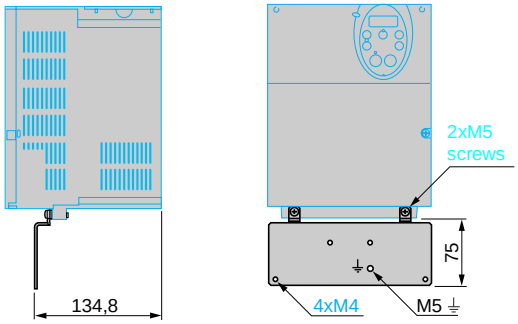

ATV 21HD11M3X…HD18M3X, ATV 21HD15N4, HD18N4

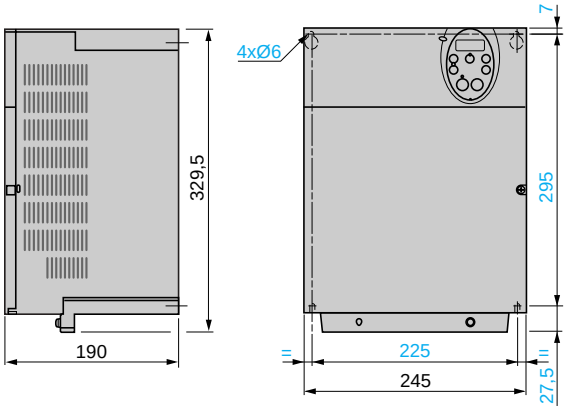

Plate for EMC mounting (supplied with the drive)

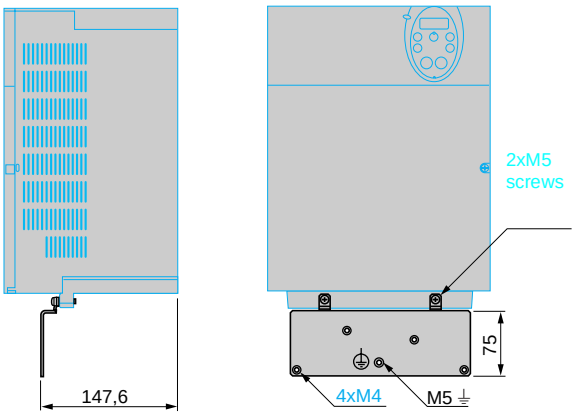

Variable speed drives for asynchronous motors

Altivar 21

UL Type 1/IP 20 drives

ATV 21HD22M3X, ATV 21HD22N4...HD45N4

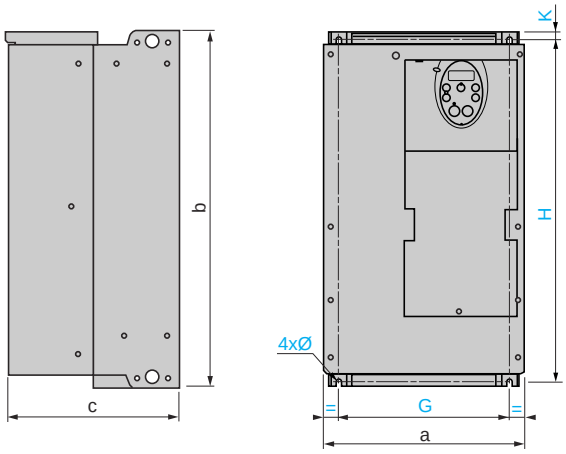

EMC mounting plate (supplied with drive)

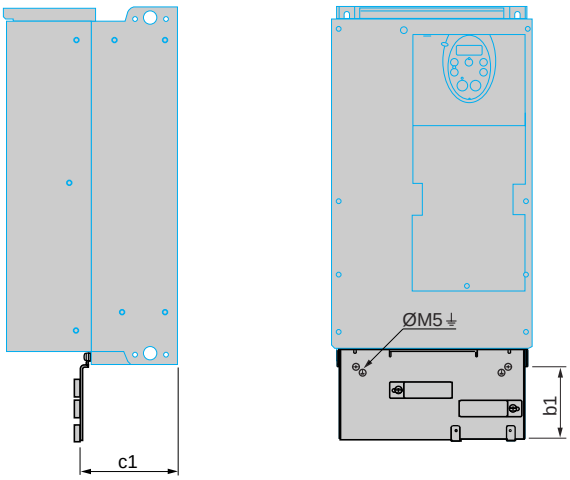

ATV 21H	a	b	b1	c	c1	G	H	K	Ø
D22M3X D22N4, D30N4	240	420	122	214	120	206	403	10	6
D37N4, D45N4	240	550	113	244	127	206	529	10	6

ATV 21HD30M3X

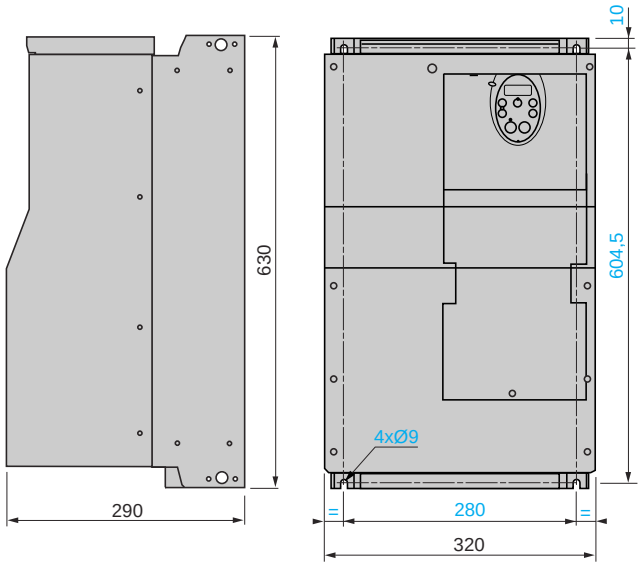

EMC mounting plate (supplied with drive)

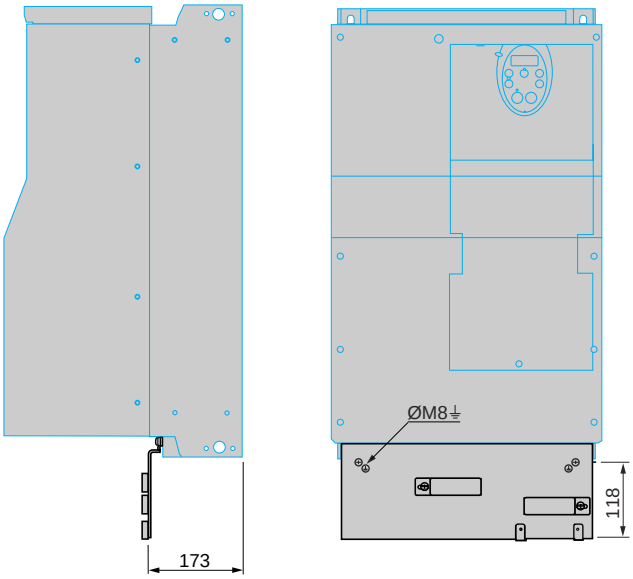

ARCO CONTROL
:051-37133855-6
:09014284236
WWW.ARCOKALA.COM

Variable speed drives for asynchronous motors

Altivar 21

IP 54 drives and accessories

ATV 21W075N4...WU75N4, ATV 21W075N4C...WU75N4C

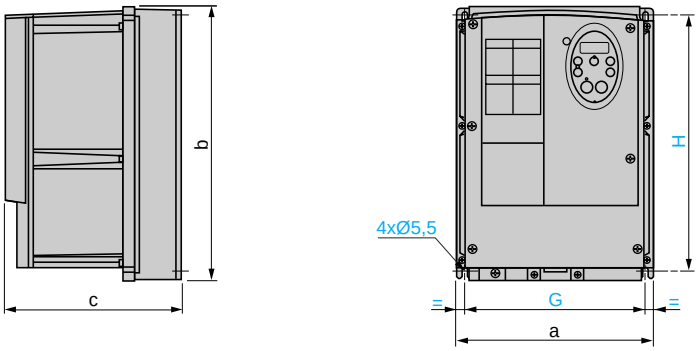

ATV 21W	a	b	c	G	H
075N4, U15N4 075N4C, U15N4C	215	297	192	197	277
U22N4...U75N4 U22N4C...U75N4C	230	340	208	212	318

ATV 21WD11N4...WD75N4, ATV 21WD11N4C...WD75N4C

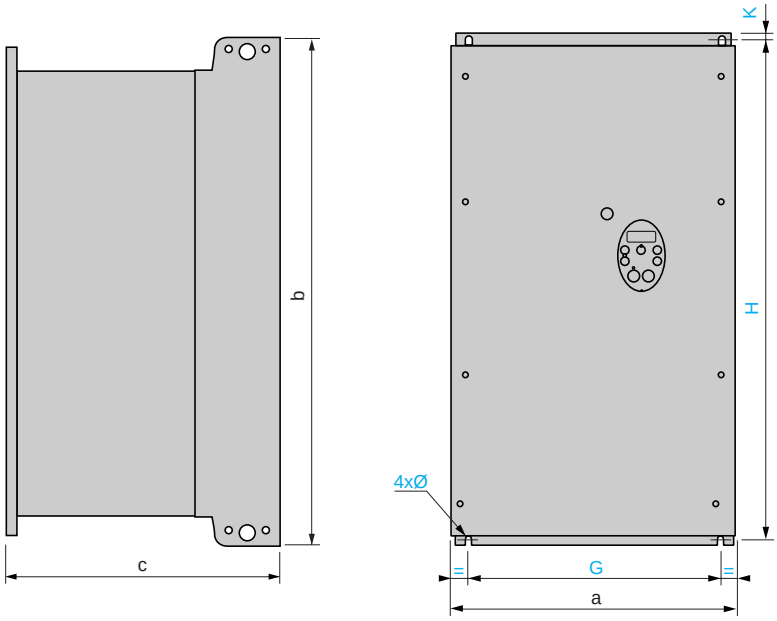

ATV 21W	a	b	c	G	H	K
D11N4, D15N4 D11N4C, D15N4C	290	560	315	250	544	8
D18N4 D18N4C	310	665	315	270	650	10
D22N4, D30N4 D22N4C, D30N4C	284	720	315	245	700	10
D37N4, D45N4 D37N4C, D45N4C	284	880	343	245	860	10
D55N4, D75N4 D55N4C, D75N4C	362	1000	364	300	975	10

UL Type 1 conformity kits

VW3 A31 814...817

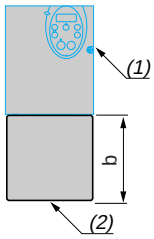

VW3	b
A31 814, 815	68
A31 816	96
A31 817	99

(1) Drive
(2) Kit

VW3 A9 206...208

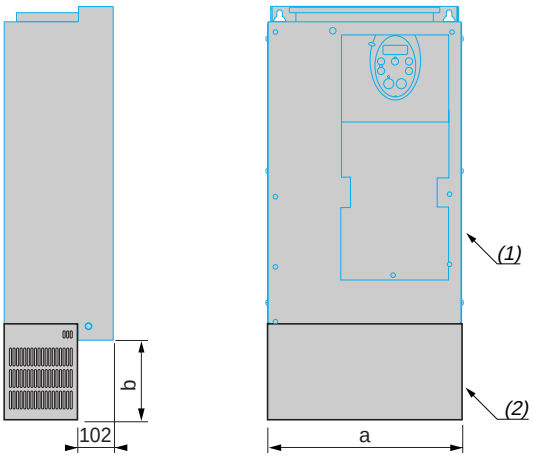

VW3	a	b
A9 206	240	59.9
A9 207	240	51.5
A9 208	320	136

(1) Drive
(2) Kit

Variable speed drives for asynchronous motors

Altivar 21

Accessories, dialogue and additional EMC input filters

Kits for mounting on ⊓ rail

VW3 A31 852

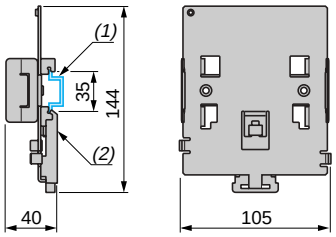

(1) ⊓ rail
(2) Kit

Remote display terminal

VW3 A21 101

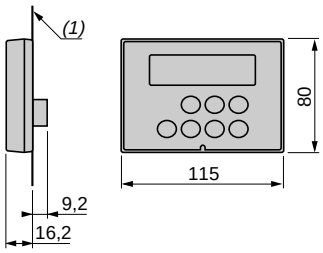

Cut-outs and drill holes

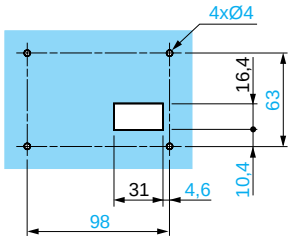

(1) Enclosure door

Additional EMC input filters

VW3 A31 404, 406...409

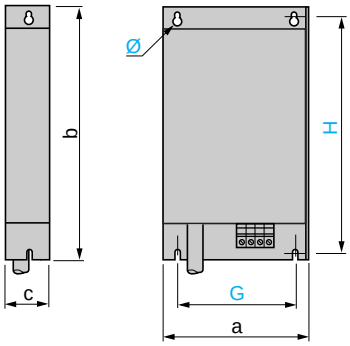

VW3 A4 406...408

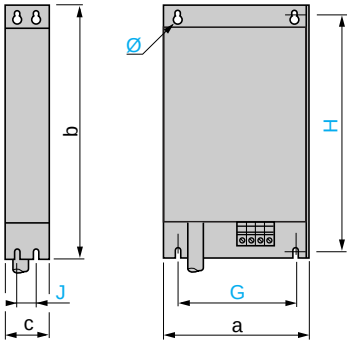

VW3	a	b	c	G	H	J	Ø
A31 404	107	195	42	85	180	–	4.5
A31 406	140	235	50	120	215	–	4.5
A31 407	180	305	60	140	285	–	5.5
A31 408	245	395	80	205	375	–	5.5
A31 409	245	395	60	205	375	–	5.5
A4 406	240	522	79	200	502.5	40	9
A4 407	240	650	79	200	631	40	9
A4 408	320	750	119	280	725	80	9

Mounting the filter under the drive

Front view

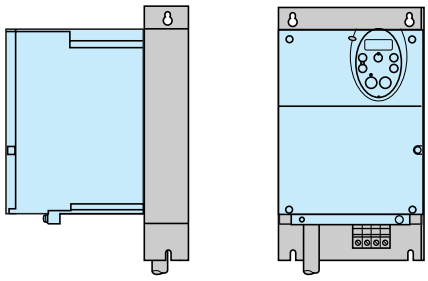

Mounting the filter next to the drive

Front view

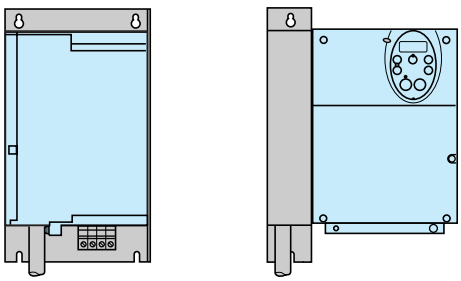

Front view

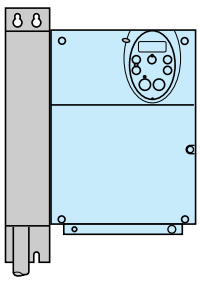

Presentation: pages 18, 19 and 24
Characteristics: page 25
References: pages 18, 19 and 25

Variable speed drives for asynchronous motors

Altivar 21

Recommended scheme for ATV 21H●●●M3X, ATV 21●●●●N4, ATV 21W●●●N4C

3-phase power supply

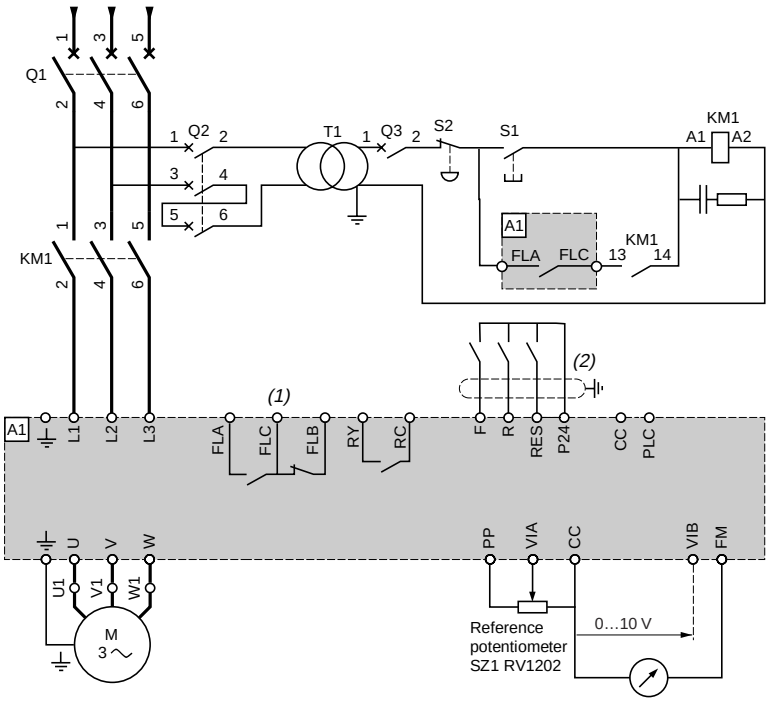

Switches (factory settings)

Voltage/current selection for analog I/O (FM and VIA)

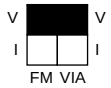

Selection of logic type

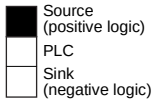

Note: *All terminals are located at the bottom of the drive. Install interference suppressors on all inductive circuits near the drive or connected on the same circuit, such as relays, contactors, solenoid valves, fluorescent lighting, etc.*

Compatible comonents (for a complete list of references, please consult the “Motor starter solutions. Control and protection components” catalogue).

Ref.	Description
A1	ATV 21 drive, see pages 16 and 17
KM1	Contactor, see pages 34 to 37
Q1	Circuit breaker, see pages 34 to 37
Q2	GV2 L rated at twice the nominal primary current of T1
Q3	GB2 CB05
S1, S2	XB2 B or XA2 B pushbuttons
T1	100 VA transformer 220 V secondary

(1) Fault relay contacts for remote signalling of the drive status
(2) Connection of the common for the logic inputs depends on the positioning of the switch ("Source", "PLC", "Sink"), see page 31.

ARCO CONTROL
:051-37133855-6
:09014284236
WWW.ARCOKALA.COM

Examples of recommended schemes

Logic inputs according to the position of the logic type switch

Source position

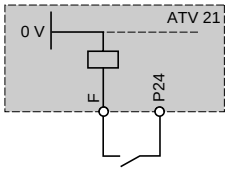

Sink position

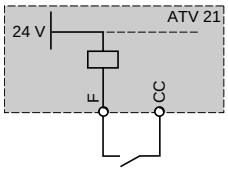

PLC position with PLC transistor outputs

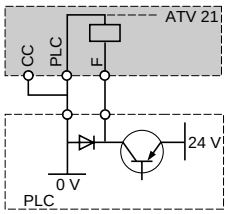

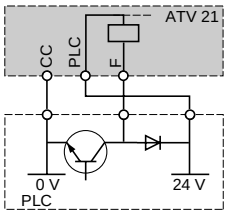

2-wire control

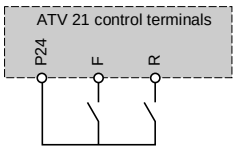

F: Forward
R: Preset speed

3-wire control

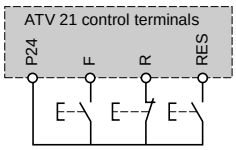

F: Forward
R: Stop
RES: Fault reset

PTC probe

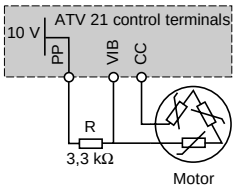

Voltage analog inputs

External + 10 V

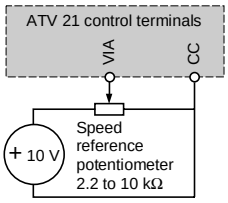

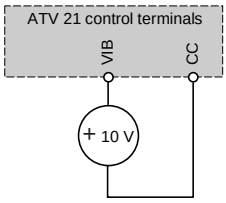

Analog input configured for current

0-20 mA, 4-20 mA, X-Y mA

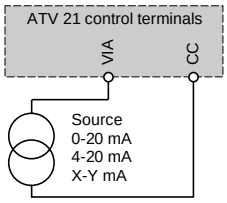

Analog input VIA configured as logic input

Positive logic (Source position)

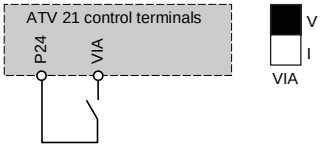

Negative logic (Sink position)

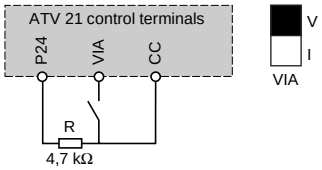

Additional EMC input filters VW3 A31 404, 406…409, VW3 A4 406…408

3-phase power supply

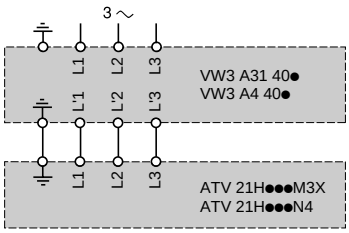

Variable speed drives for asynchronous motors

Altivar 21

Electromagnetic compatibility

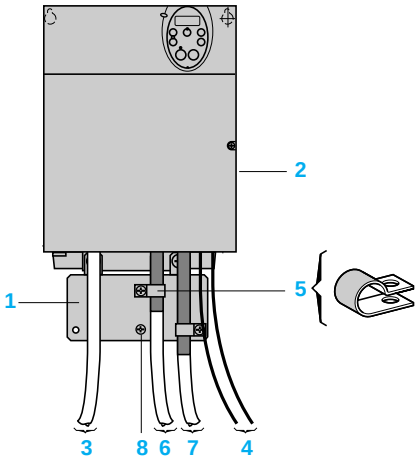

ATV 21H075M3X…HD18M3X,
ATV 21H075N4…HD18N4

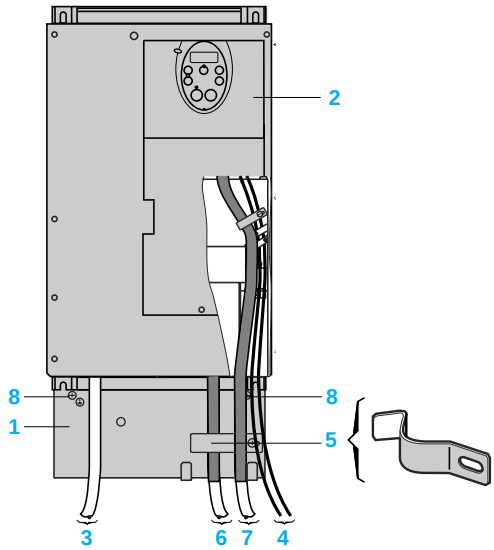

ATV 21HD22M3X, HD30M3X,
ATV 21HD22N4…HD75N4

Connections to meet the requirements of EMC standards

Principle

■ Earths between the drive, motor and cable shielding must have “high frequency” equipotentiality.

■ Use shielded cables with shielding connected to earth throughout 360° at both ends for the motor cable and the control-command cables. Conduit or metal ducting can be used for part of the shielding length provided that there is no break in the continuity of the earth connection.

■ Ensure maximum separation between the power supply cable (line supply) and the motor cable.

Installation diagram for ATV 21H●●●M3X and ATV 21H●●●N4 drives

1 Steel plate to be mounted on the drive (earthed casing)
2 UL Type 1/IP 20 Altivar drive
3 Unshielded power supply wires or cable
4 Unshielded wires for the output of the fault relay contacts
5 Attach and earth the shielding of cables 6 and 7 as close as possible to the drive:
- Strip the shielding.
- Attach the cable to the metal plate 1 by tightening the clamp on the stripped part of the shielding.
The shielding must be clamped tightly enough to the metal plate to ensure good contact.
6 Shielded cable for connecting the motor
7 Shielded cable for connecting the control/signal wiring
For applications requiring several conductors, use cables with a small cross-section (0.5 mm^2).
For cables 6 and 7, the shielding must be earthed at both ends. The shielding must be continuous and intermediate terminals must be placed in EMC shielded metal boxes.
8 Earthing screw. Use this screw for the motor cable on low power rated drives, as the screw on the heatsink is inaccessible.

Note: *The HF equipotential earth connection between the drive, motor and cable shielding does not remove the need to connect the PE conductors (green-yellow) to the appropriate terminals on each unit.*
If using an additional EMC input filter, it should be mounted beneath the drive and connected directly to the line supply via an unshielded cable. Link 3 on the drive is then via the filter output cable.

ARCO CONTROL
:051-37133855-6
:09014284236
WWW.ARCOKALA.COM

Variable speed drives for asynchronous motors

Altivar 21

Electromagnetic compatibility

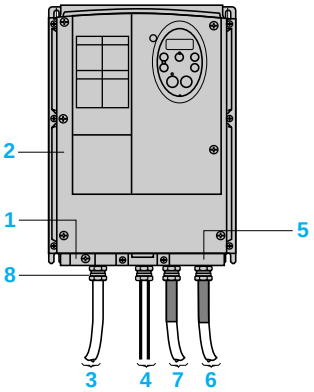

ATV 21W075N4…WU75N4,
ATV 21W075N4C…WU75N4C

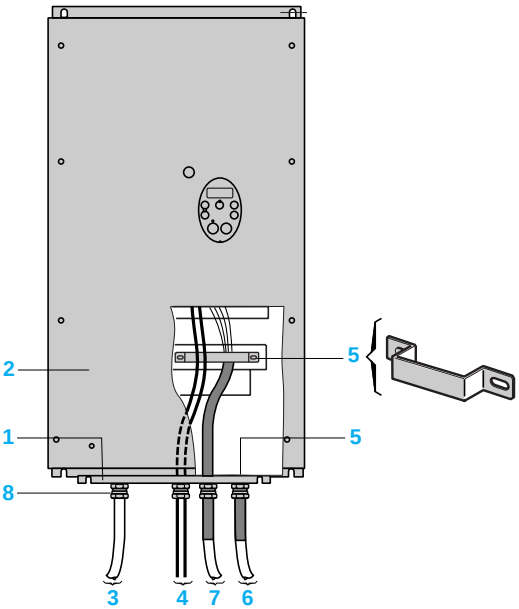

ATV 21WD11N4…WD30N4,
ATV 21WD11N4C…WD75N4C

Connections to meet the requirements of EMC standards (continued)

Installation diagram for ATV 21W ●●●N4, ATV 21W●●●N4C drives

1 Steel plate (earthed casing)
2 Altivar 21 IP 54 drive
3 Unshielded power supply wires or cable
4 Unshielded wires for the output of the fault relay contacts
5 Attach and earth the shielding for cables 6 and 7 as close as possible to the drive:
- Strip the shielding.
- Attach the shielded cable to the cable gland 8ensuring it is fully in contact throughout 360°.
- Fold back the shielding and clamp it between the ring and the body of the cable gland.

Depending on the drive rating, the shielding of cable 7 can be earthed using a cable gland 8 or a cable clamp 5.
The shielding must be clamped tightly enough to the metal plate to ensure good contact.
6 Shielded cable for connecting the motor
7 Shielded cable for connecting the control/signal wiring
For applications requiring several conductors, use cables with a small cross-section (0.5 mm^2).
For cables 6 and 7, the shielding must be connected to the earth at both ends.
The shielding must be continuous and intermediate terminals must be placed in EMC shielded metal boxes.
8 Metal cable gland (not supplied) for cables 6 and 7.
Standard cable gland (not supplied) for cables 3 and 4.

Note: *The HF equipotential earth connection between the drive, motor and cable shielding does not remove the need to connect the PE conductors (green-yellow) to the appropriate terminals on each unit.*

Operation on an IT system

IT system: Isolated or impedance earthed neutral
Use a permanent insulation monitor compatible with non-linear loads, such as a Merlin Gerin type XM200 (please consult your Regional Sales Office).
ATV 21●●●●N4 and ATV 21W●●●N4C drives have built-in EMC filters. These filters can be easily disconnected if using an IT system and subsequently reconnected if necessary.

Variable speed drives for asynchronous motors

Altivar 21

Motor starters: supply voltage 200…240 V

DF535086

103279-08-M

PF106478-14-M

GV2 L08
+
LC1 D09●●
+
ATV 21H075M3X

Applications

Circuit-breaker/contactor/drive combinations can be used to ensure continuous service of the installation with optimum safety.
The type of circuit-breaker/contactor coordination selected can reduce maintenance costs in the event of a motor short-circuit by minimizing the time required to make the necessary repairs and the cost of replacement equipment.
The suggested combinations provide type 1 or type 2 coordination depending on the drive rating.
Type 2 coordination: A motor short-circuit will not damage the device or affect its settings. The motor starter should be able to operate once the electrical fault has been removed. The electrical isolation provided by the circuit-breaker will not be affected by the short-circuit. Welding of the contactor contacts is permissible if they can be separated easily.
Type 1 coordination: The electrical isolation provided by the circuit-breaker will not be affected by the incident and no other elements apart from the contactor are damaged as a result of the motor short-circuit.
The drive controls the motor, provides protection against short-circuits between the drive and the motor and protects the motor cable against overloads. The overload protection is provided by the drive's motor thermal protection. If this protection is removed, external thermal protection should be provided.
Before restarting the installation, the cause of the trip must be removed.

Motor starters for UL Type 1/IP 20 drives

Motor Power *(1)*		Drive Reference	Circuit-breaker Reference *(2)*	Rating	Im	Line contactor Reference *(3) (4)*
kW	*HP*			A	A	
Three-phase supply voltage: 200…240 V 50/60 Hz. Type 2 coordination						
0.75	*1*	**ATV 21H075M3X**	**GV2 L08**	4	–	**LC1 D09●●**
1.5	*2*	**ATV 21HU15M3X**	**GV2 L10**	6.3	–	**LC1 D09●●**
2.2	*3*	**ATV 21HU22M3X**	**GV2 L14**	10	–	**LC1 D09●●**
3	–	**ATV 21HU30M3X**	**GV2 L16**	14	–	**LC1 D09●●**
4	*5*	**ATV 21HU40M3X**	**GV2 L20**	18	–	**LC1 D09●●**
5.5	*7.5*	**ATV 21HU55M3X**	**GV2 L22**	25	–	**LC1 D09●●**
7.5	*10*	**ATV 21HU75M3X**	**GV2 L32**	32	–	**LC1 D18●●**
11	*15*	**ATV 21HD11M3X**	**NS80HMA50**	50	300	**LC1 D32●●**
15	*20*	**ATV 21HD15M3X**	**NS80HMA80**	80	480	**LC1 D40●●**
18.5	*25*	**ATV 21HD18M3X**	**NS100●MA100**	100	600	**LC1 D80●●**
22	*30*	**ATV 21HD22M3X**	**NS100●MA100**	100	600	**LC1 D80●●**
30	*40*	**ATV 21HD30M3X**	**NS160●MA150**	150	1350	**LC1 D115●●**
Three-phase supply voltage: 200…240 V 50/60 Hz. Type 1 coordination						
0.75	*1*	**ATV 21H075M3X**	**GV2 LE08**	4	–	**LC1 K06●●**
1.5	*2*	**ATV 21HU15M3X**	**GV2 LE10**	6.3	–	**LC1 K06●●**
2.2	*3*	**ATV 21HU22M3X**	**GV2 LE14**	10	–	**LC1 K06●●**
3	–	**ATV 21HU30M3X**	**GV2 LE16**	14	–	**LC1 K06●●**
4	*5*	**ATV 21HU40M3X**	**GV2 LE20**	18	–	**LC1 K06●●**
5.5	*7.5*	**ATV 21HU55M3X**	**GV2 LE22**	25	–	**LC1 D09●●**
7.5	*10*	**ATV 21HU75M3X**	**GV2 LE32**	32	–	**LC1 D18●●**
11	*15*	**ATV 21HD11M3X**	**NS80HMA50**	50	300	**LC1 D32●●**
15	*20*	**ATV 21HD15M3X**	**NS80HMA80**	80	480	**LC1 D40●●**
18.5	*25*	**ATV 21HD18M3X**	**NS100●MA100**	100	600	**LC1 D50●●**
22	*30*	**ATV 21HD22M3X**	**NS100●MA100**	100	600	**LC1 D80●●**
30	*40*	**ATV 21HD30M3X**	**NS160●MA150**	150	1350	**LC1 D115●●**

(1) Standard power ratings for 4-pole motors 50/60 Hz 230 V.
The values expressed in HP comply with the NEC (National Electrical Code).
(2) NS80HMA●●, NS100●MA●●● : Products sold under the Merlin Gerin brand.
Breaking capacity of circuit-breakers according to standard IEC60947-2:

Circuit breaker	Icu (kA) for 240 V			
		N	H	L
GV2 L08…GV2 L20 **GV2 LE08…GV2 LE20**	100	–	–	–
GV2 L22, GV2 L32, **GV2 LE22, GV2 LE32**	50	–	–	–
NS80HMA	100	–	–	–
NS●●●●MA	–	85	100	150

(3) Composition of contactors:
LC1 K06, LC1 D09 to LC1 D115: 3 poles + 1 "N/O" auxiliary contact and 1 "N/C" auxiliary contact.
Replace ●● with the control circuit voltage reference indicated in the table below.

	Volts ∼	24	48	110	220	230	240
LC1 K06	50/60 Hz	**B7**	**E7**	**F7**	**M7**	**P7**	**U7**
LC1 D09…D115	50 Hz	**B5**	**E5**	**F5**	**M5**	**P5**	**U5**
	60 Hz	**B6**	**E6**	**F6**	**M6**	**–**	**U6**
	50/60 Hz	**B7**	**E7**	**F7**	**M7**	**P7**	**U7**

For other voltages available between 24 V and 660 V, or a DC control circuit, please consult your Regional Sales Office.

Variable speed drives for asynchronous motors

Altivar 21

Motor starters: supply voltage 380…415 V

DF535088

103283-07-M

106485-30-M

NS80HMA50
+
LC1 D32●●
+
ATV 21HD22N4

Motor starters for UL Type 1/IP 20 drives (continued)

Motor Power (1)		Drive Reference	Circuit breaker Reference (2)	Rating	Im	Line contactor Reference (3) (4)
kW	HP			A	A	
Three-phase supply voltage: 380…415 V 50/60 Hz. Type 2 coordination						
0.75	1	ATV 21H075N4	GV2 L07	2.5	–	LC1 D09●●
1.5	2	ATV 21HU15N4	GV2 L08	4	–	LC1 D09●●
2.2	3	ATV 21HU22N4	GV2 L10	6.3	–	LC1 D09●●
3	–	ATV 21HU30N4	GV2 L10	6.3	–	LC1 D09●●
4	5	ATV 21HU40N4	GV2 L14	10	–	LC1 D09●●
5.5	7.5	ATV 21HU55N4	GV2 L16	14	–	LC1 D09●●
7.5	10	ATV 21HU75N4	GV2 L20	18	–	LC1 D09●●
11	15	ATV 21HD11N4	GV2 L22	25	–	LC1 D09●●
15	20	ATV 21HD15N4	GV2 L32	32	–	LC1 D18●●
18.5	25	ATV 21HD18N4	NS80HMA50	50	300	LC1 D32●●
22	30	ATV 21HD22N4	NS80HMA50	50	300	LC1 D32●●
30	40	ATV 21HD30N4	NS80HMA80	80	480	LC1 D40●●
37	50	ATV 21HD37N4	NS80HMA80	80	480	LC1 D80●●
45	60	ATV 21HD45N4	NS100●MA100	100	600	LC1 D115●●
55	75	ATV 21HD55N4	NS100●MA150	150	1350	LC1 D115●●
75	100	ATV 21HD75N4	NS100●MA220	220	1980	LC1 F185●●
Three-phase supply voltage: 380…415 V 50/60 Hz. Type 1 coordination						
0.75	1	ATV 21H075N4	GV2 LE07	2.5	–	LC1 K06●●
1.5	2	ATV 21HU15N4	GV2 LE08	4	–	LC1 K06●●
2.2	3	ATV 21HU22N4	GV2 LE10	6.3	–	LC1 K06●●
3	–	ATV 21HU30N4	GV2 LE10	6.3	–	LC1 K06●●
4	5	ATV 21HU40N4	GV2 LE14	10	–	LC1 K06●●
5.5	7.5	ATV 21HU55N4	GV2 LE16	14	–	LC1 K06●●
7.5	10	ATV 21HU75N4	GV2 LE20	18	–	LC1 K06●●
11	15	ATV 21HD11N4	GV2 LE22	25	–	LC1 D09●●
15	20	ATV 21HD15N4	GV2 LE32	32	–	LC1 D18●●
18.5	25	ATV 21HD18N4	NS80HMA50	50	300	LC1 D32●●
22	30	ATV 21HD22N4	NS80HMA50	50	300	LC1 D32●●
30	40	ATV 21HD30N4	NS80HMA80	80	480	LC1 D40●●
37	50	ATV 21HD37N4	NS80HMA80	80	480	LC1 D80●●
45	60	ATV 21HD45N4	NS100●MA100	100	600	LC1 D115●●
55	75	ATV 21HD55N4	NS100●MA150	150	1350	LC1 D115●●
75	100	ATV 21HD75N4	NS100●MA220	220	1980	LC1 D115●●

(1) Standard power ratings for 4-pole motors 50/60 Hz 400 V.
The values expressed in HP comply with the NEC (National Electrical Code).
(2) NS80HMA●●, NS100●MA●●●: Products sold under the Merlin Gerin brand.
For references to be completed, replace the dot with the letter corresponding to the circuit-breaker breaking performance (N, H, L).
Breaking capacity of circuit-breakers according to standard IEC 60947-2:

Circuit breaker	Icu (kA) for 400 V			
		N	H	L
GV2 L07…L14	100	–	–	–
GV2 L16…L32	50	–	–	–
GV2 LE07…LE22	15	–	–	–
GV2 LE32	10	–	–	–
NS80HMA	70	–	–	–
NS100●MA	–	25	70	150

(3) Composition of contactors:
LC1 K06, LC1 D09 to LC1 D115: 3 poles + 1 "N/O" auxiliary contact and 1 "N/C" auxiliary contact.
LC1 F185: 3 poles. To add auxiliary contacts or other accessories, please refer to the "Motor-starter solutions - Control and protection components" catalogue.
Replace ●● with the control circuit voltage reference indicated in the table below:

	Volts ∿	24	48	110	220	230	240
LC1 K06	50/60 Hz	**B7**	**E7**	**F7**	**M7**	**P7**	**U7**
LC1 D09…D115	50 Hz	**B5**	**E5**	**F5**	**M5**	**P5**	**U5**
	60 Hz	**B6**	**E6**	**F6**	**M6**	**–**	**U6**
	50/60 Hz	**B7**	**E7**	**F7**	**M7**	**P7**	**U7**
LC1 F185	50 Hz (LX1 coil)	**B5**	**E5**	**F5**	**M5**	**P5**	**U5**
	60 Hz (LX1 coil)	**–**	**E6**	**F6**	**M6**	**–**	**U6**
	40…400 Hz (LX9 coil)	**–**	**E7**	**F7**	**M7**	**P7**	**U7**

For other voltages available between 24 V and 660 V, or a DC control circuit, please consult your Regional Sales Office.

Variable speed drives for asynchronous motors

Altivar 21

Motor starters: supply voltage 380…415 V

DF535086

103279-08-M

PF106476-26-M

GV2 L07
+
LC1 D09●●
+
ATV 21W075N4

Motor starters for IP 54 drives

Motor		Drive	Circuit breaker			Line contactor
Power *(1)*		Reference	Reference *(2)*	Rating	Im	Reference *(3) (4)*
kW	*HP*			A	A	
Three-phase supply voltage: 380…415 V 50/60 Hz. Type 2 coordination						
0.75	*1*	**ATV 21W075N4** **ATV 21W075N4C**	**GV2 L07**	2.5	–	**LC1 D09●●**
1.5	*2*	**ATV 21WU15N4** **ATV 21WU15N4C**	**GV2 L08**	4	–	**LC1 D09●●**
2.2	*3*	**ATV 21WU22N4** **ATV 21WU22N4C**	**GV2 L10**	6.3	–	**LC1 D09●●**
3	–	**ATV 21WU30N4** **ATV 21WU30N4C**	**GV2 L10**	6.3	–	**LC1 D09●●**
4	*5*	**ATV 21WU40N4** **ATV 21WU40N4C**	**GV2 L14**	10	–	**LC1 D09●●**
5.5	*7.5*	**ATV 21WU55N4** **ATV 21WU55N4C**	**GV2 L16**	14	–	**LC1 D09●●**
7.5	*10*	**ATV 21WU75N4** **ATV 21WU75N4C**	**GV2 L20**	18	–	**LC1 D09●●**
11	*15*	**ATV 21WD11N4** **ATV 21WD11N4C**	**GV2 L22**	25	–	**LC1 D09●●**
15	*20*	**ATV 21WD15N4** **ATV 21WD15N4C**	**GV2 L32**	32	–	**LC1 D18●●**
18.5	*25*	**ATV 21WD18N4** **ATV 21WD18N4C**	**NS80HMA50**	50	300	**LC1 D25●●**
22	*30*	**ATV 21WD22N4** **ATV 21WD22N4C**	**NS80HMA50**	50	300	**LC1 D32●●**
30	*40*	**ATV 21WD30N4** **ATV 21WD30N4C**	**NS80HMA80**	80	480	**LC1 D40●●**
37	*50*	**ATV 21WD37N4** **ATV 21WD37N4C**	**NS80HMA80**	80	480	**LC1 D80●●**
45	*60*	**ATV 21WD45N4** **ATV 21WD45N4C**	**NS100●MA100**	100	600	**LC1 D80●●**
55	*75*	**ATV 21WD55N4** **ATV 21WD55N4C**	**NS100●MA150**	150	1350	**LC1 D115●●**
75	*100*	**ATV 21WD75N4** **ATV 21WD75N4C**	**NS100●MA150**	150	1350	**LC1 D115●●**

(1) Standard power ratings for 4-pole motors 50/60 Hz 400 V.
The values expressed in HP comply with the NEC (National Electrical Code).
(2) NS80HMA●●, NS100●MA●●●: Products sold under the Merlin Gerin brand.
Breaking capacity of circuit-breakers according to standard IEC60947-2:

Circuit breaker	Icu (kA) for 400 V			
		N	H	L
GV2 L07…L14	100	–	–	–
GV2 L16…L32	50	–	–	–
NS80HMA	70	–	–	–
NS100●MA	–	25	70	150

(3) Composition of contactors:
LC1 D09 to LC1 D115: 3 poles + 1 "N/O" auxiliary contact and 1 "N/C" auxiliary contact.
(4) Replace ●● with the control circuit voltage reference indicated in the table below.

	Volts ∿	24	48	110	220	230	240
LC1 D09…D115	50 Hz	**B5**	**E5**	**F5**	**M5**	**P5**	**U5**
	60 Hz	**B6**	**E6**	**F6**	**M6**	**–**	**U6**
	50/60 Hz	**B7**	**E7**	**F7**	**M7**	**P7**	**U7**

For other voltages available between 24 V and 660 V, or a DC control circuit, please consult your Regional Sales Office.

Variable speed drives for asynchronous motors

Altivar 21

Motor starters: supply voltage 380…415 V

DF535088

103283-07-M

PF106483-32-M

NS80HMA50
+
LC1 D25●●
+
ATV 21WD18N4

Motor starters for IP 54 drives (continued)

Motor Power (1) kW	HP	Drive Reference	Circuit breaker Reference (2)	Rating A	Im A	Line contactor Reference (3) (4)
Three-phase supply voltage: 380…415 V 50/60 Hz. Type 1 coordination						
0.75	1	ATV 21W075N4 ATV 21W075N4C	GV2 LE07	2.5	–	LC1 K06●●
1.5	2	ATV 21WU15N4 ATV 21WU15N4C	GV2 LE08	4	–	LC1 K06●●
2.2	3	ATV 21WU22N4 ATV 21WU22N4C	GV2 LE10	6.3	–	LC1 K06●●
3	–	ATV 21WU30N4 ATV 21WU30N4C	GV2 LE10	6.3	–	LC1 K06●●
4	5	ATV 21WU40N4 ATV 21WU40N4C	GV2 LE14	10	–	LC1 K06●●
5.5	7.5	ATV 21WU55N4 ATV 21WU55N4C	GV2 LE16	14	–	LC1 K06●●
7.5	10	ATV 21WU75N4 ATV 21WU75N4C	GV2 LE20	18	–	LC1 K06●●
11	15	ATV 21WD11N4 ATV 21WD11N4C	GV2 LE22	25	–	LC1 D09●●
15	20	ATV 21WD15N4 ATV 21WD15N4C	GV2 LE32	32	–	LC1 D18●●
18.5	25	ATV 21WD18N4 ATV 21WD18N4C	NS80HMA50	50	300	LC1 D25●●
22	30	ATV 21WD22N4 ATV 21WD22N4C	NS80HMA50	50	300	LC1 D32●●
30	40	ATV 21WD30N4 ATV 21WD30N4C	NS80HMA80	80	480	LC1 D40●●
37	50	ATV 21WD37N4 ATV 21WD37N4C	NS80HMA80	80	480	LC1 D50●●
45	60	ATV 21WD45N4 ATV 21WD45N4C	NS100●MA100	100	600	LC1 D80●●
55	75	ATV 21WD55N4 ATV 21WD55N4C	NS100●MA150	150	1350	LC1 D80●●
75	100	ATV 21WD75N4 ATV 21WD75N4C	NS100●MA150	150	1350	LC1 D115●●

(1) Standard power ratings for 4-pole motors 50/60 Hz 400 V.
The values expressed in HP comply with the NEC (National Electrical Code).
(2) NS80HMA●●, NS100pMA●●●: Products sold under the Merlin Gerin brand.
Breaking capacity of circuit-breakers according to standard IEC60947-2:

Circuit breaker	Icu (kA) for 400 V N	H	L
GV2 LE07…LE14	100	–	–	–
GV2 LE16…LE22	15	–	–	–
GV2 LE32	10			
NS80HMA	70	–	–	–
NS100●MA	–	25	70	150

(3) Composition of contactors:
LC1 K06, LC1 D09 to LC1 D115: 3 poles + 1 "N/O" auxiliary contact and 1 "N/C" auxiliary contact.
(4) Replace ●● with the control circuit voltage reference indicated in the table below.

	Volts ∿	24	48	110	220	230	240
LC1 K06	50/60 Hz	B7	E7	F7	M7	P7	U7
LC1 D09…D115	50 Hz	B5	E5	F5	M5	P5	U5
	60 Hz	B6	E6	F6	M6	–	U6
	50/60 Hz	B7	E7	F7	M7	P7	U7

For other voltages available between 24 V and 660 V, or a DC control circuit, please consult your Regional Sales Office.

Variable speed drives for asynchronous motors

Altivar 21

UL Type 1/IP 20 drives

Mounting recommendations

Depending on the conditions in which the drive is to be used, its installation will require certain precautions and the use of appropriate accessories.
Install the unit vertically:

- Do not place it close to heating elements.
- Leave sufficient free space to ensure that the air required for cooling purposes can circulate from the bottom to the top of the unit.

ATV 21H●●●M3X, ATV 21H●●●N4

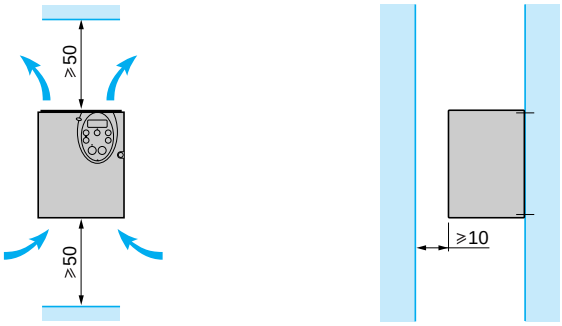

534963

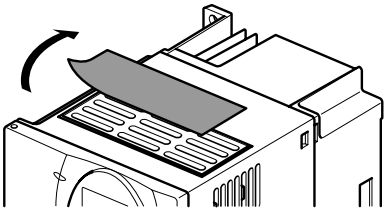

Removing the protective blanking cover for:
ATV 21H075M3X…HD18M3X,
ATV 21H075N4…HD18N4

534964

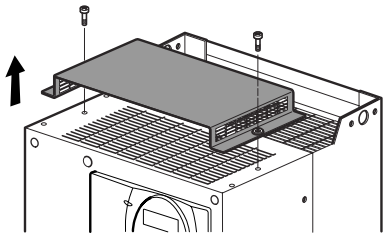

Removing the protective blanking cover for:
ATV 21HD22M3X, HD30M3X,
ATV 21HD22N4...HD75N4

Mounting types

■ Type A mounting

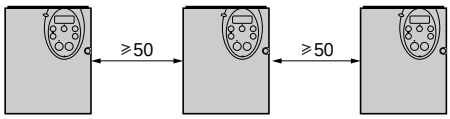

■ Type B mounting

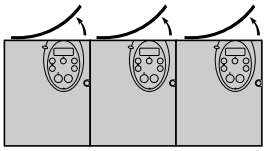

■ Type C mounting

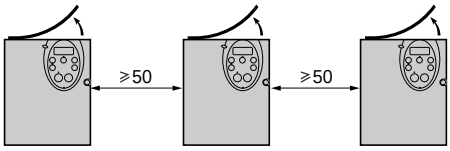

By removing the protective blanking cover from the top of the drive, the degree of protection for the drive becomes IP 20. The protective blanking cover may vary according to the drive model, see opposite.

ARCO CONTROL
:051-37133855-6
:09014284236
WWW.ARCOKALA.COM

Mounting recommendations (continued)

Derating curves

The derating curves for the drive nominal current (In) depend on the temperature, the switching frequency and the mounting type.

For intermediate temperatures (45°C for example), interpolate between 2 curves.

ATV 21H075M3X

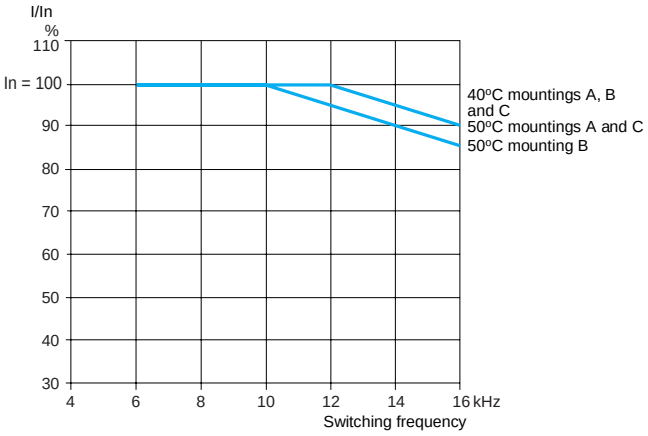

ATV 21HU15M3X, HU22M3X

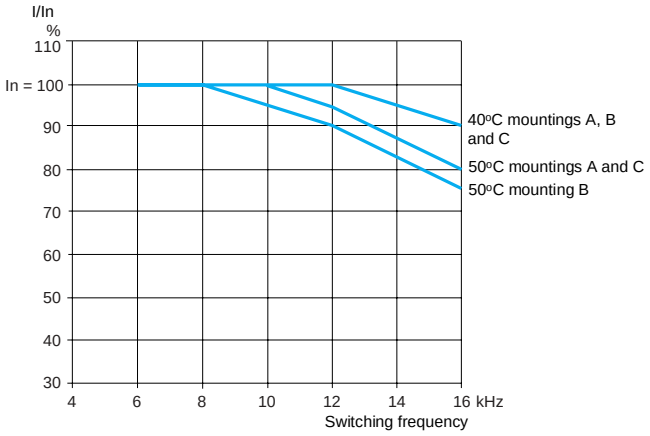

ATV 21HU30M3X

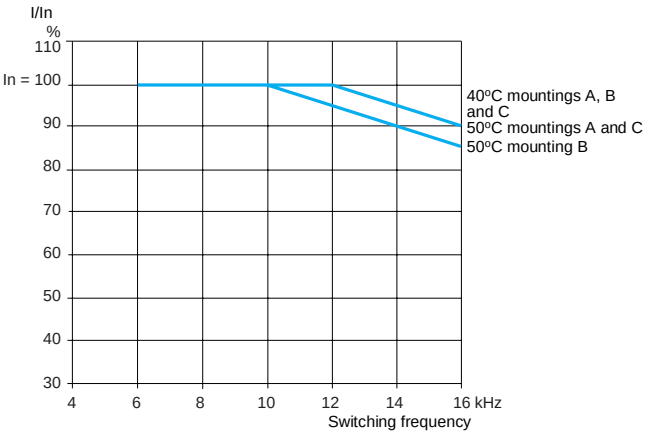

ATV 21HU40M3X

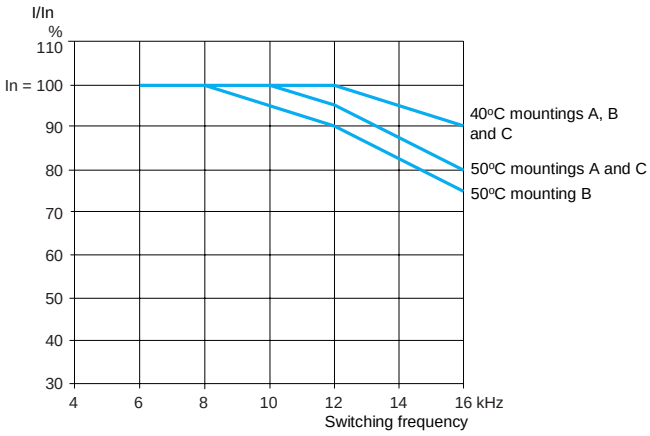

Mounting recommendations (continued)

Derating curves

ATV 21HU55M3X...HD15M3X

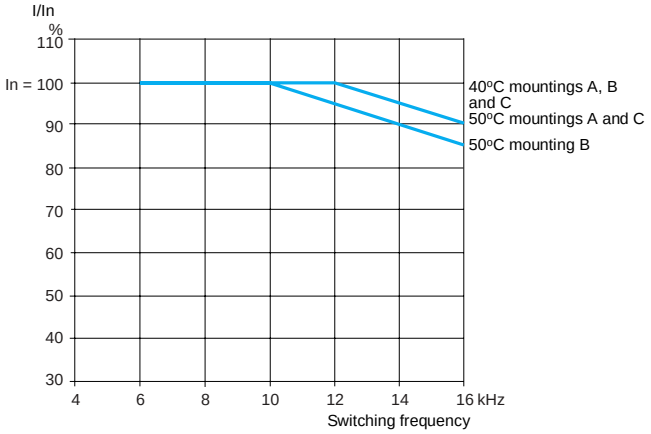

ATV 21HD18M3X

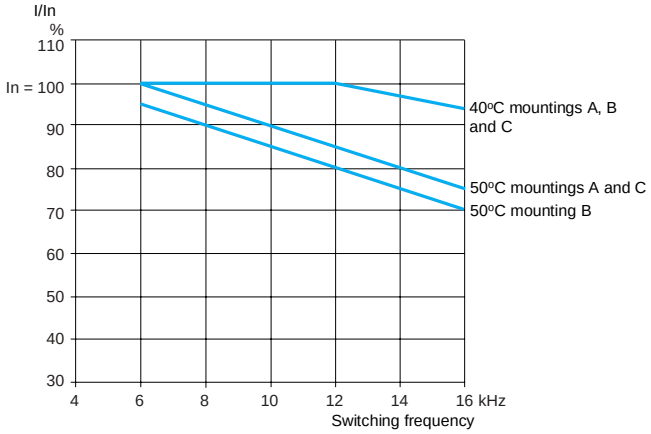

ATV 21HD22M3X

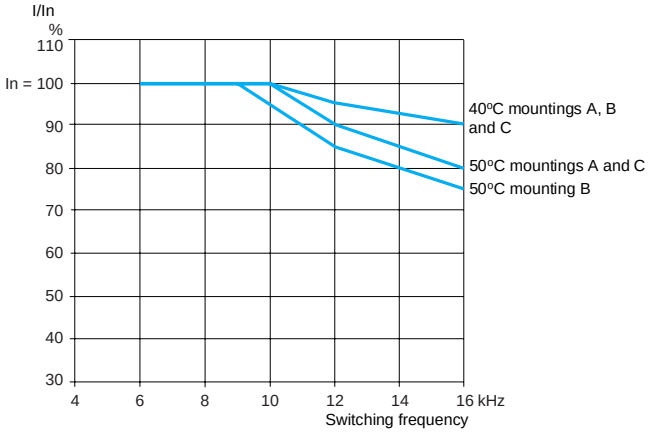

ATV 21HD30M3X

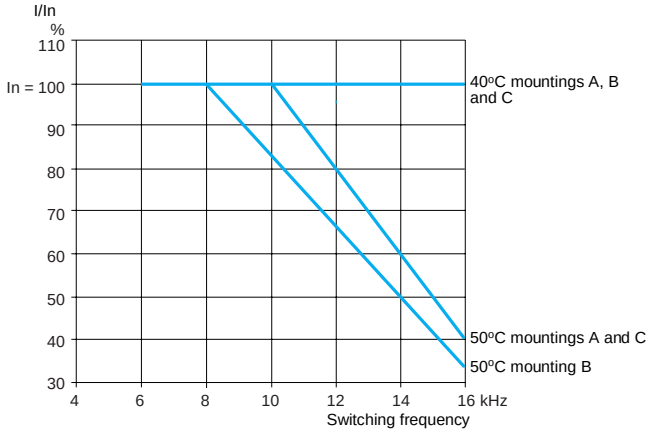

ATV 21H075N4, HU15N4

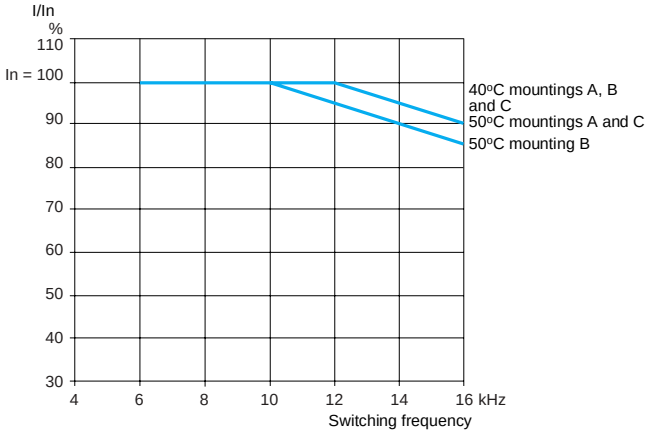

ATV 21HU22N4

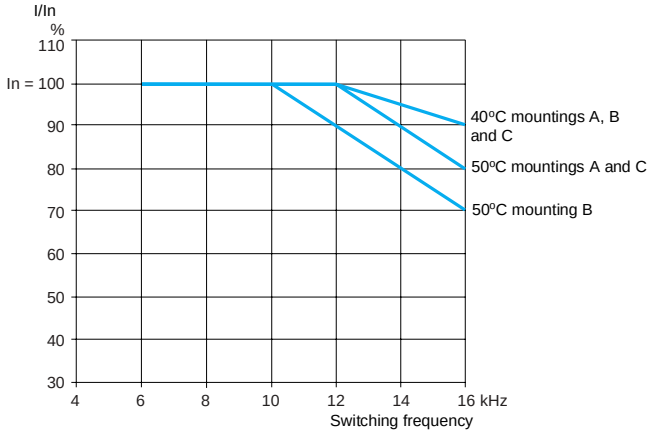

Mounting recommendations (continued)

Derating curves

ATV 21HU30N4

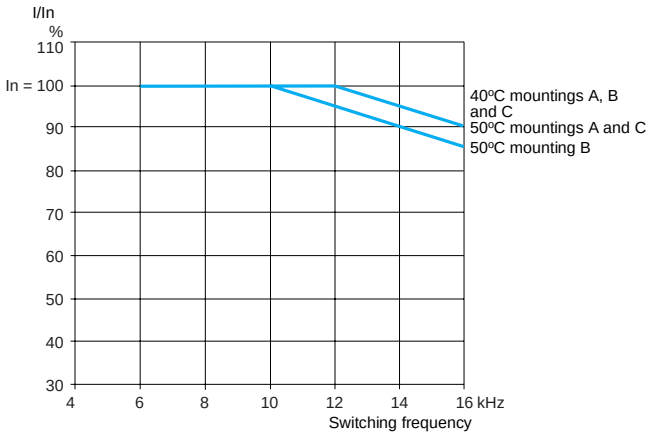

ATV 21HU40N4

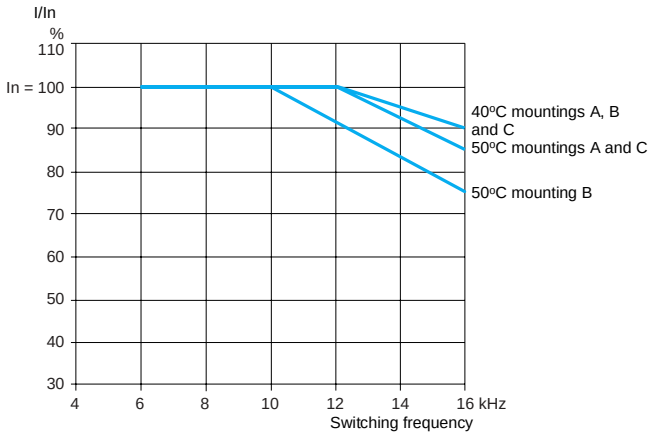

ATV 21HU55N4

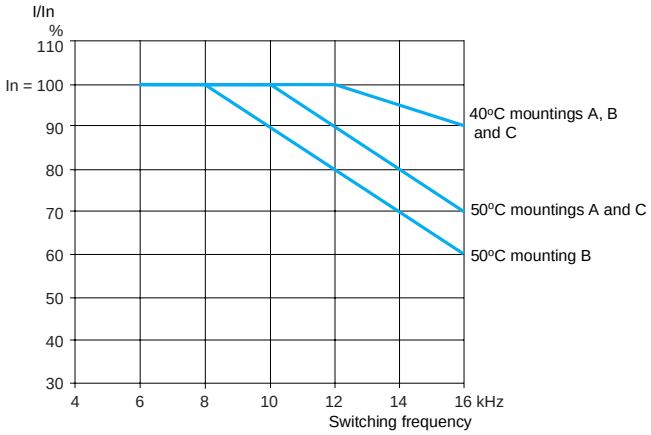

ATV 21HU75N4

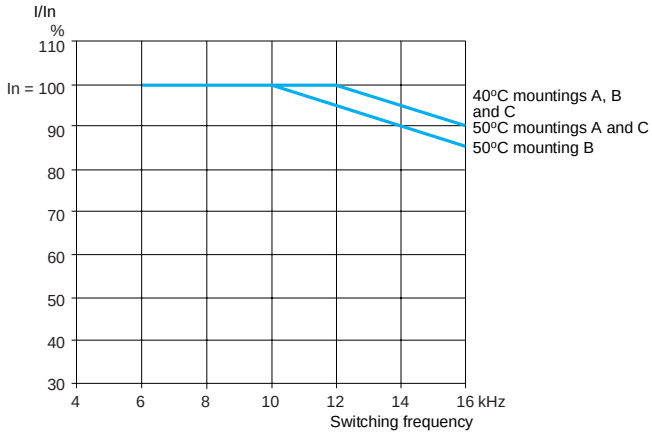

ATV 21HD11N4

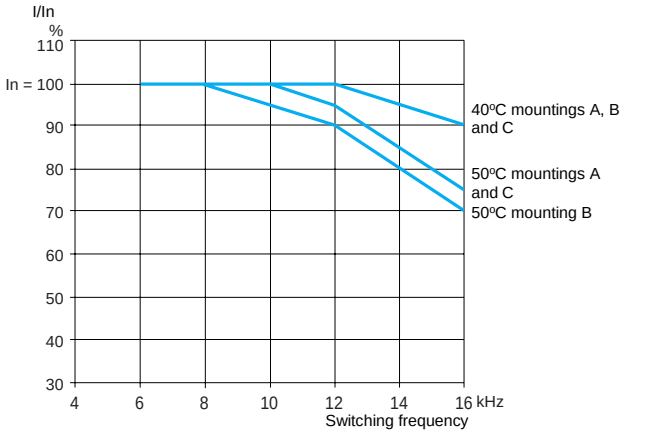

ATV 21HD15N4

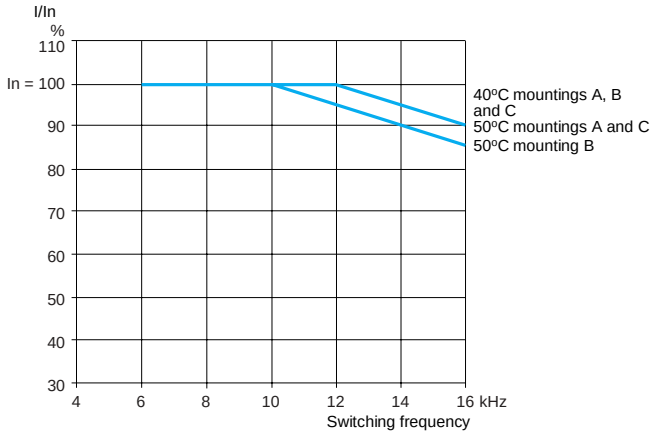

Mounting recommendations (continued)

Derating curves

ATV 21HD18N4

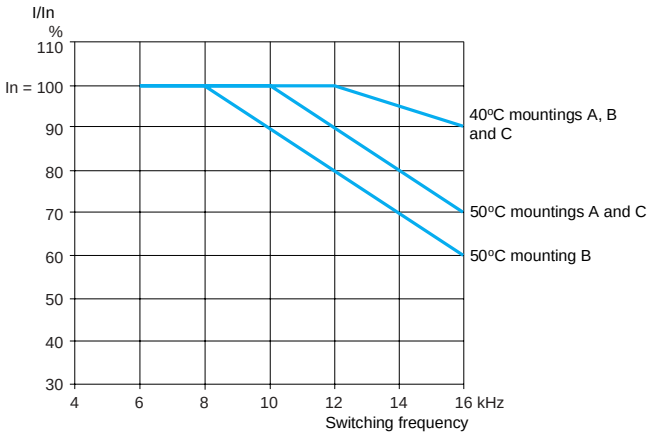

ATV 21HD22N4

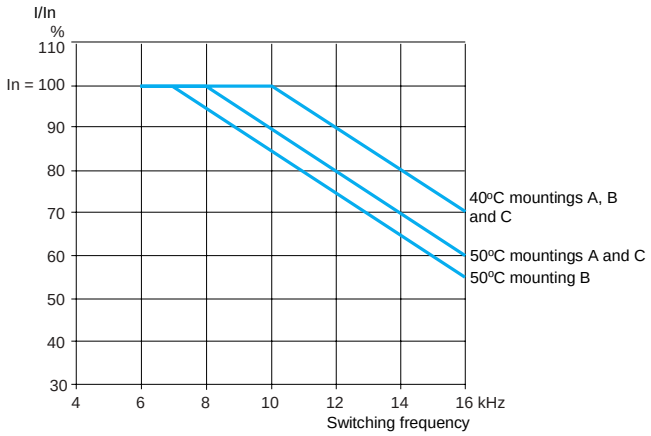

ATV 21HD30N4

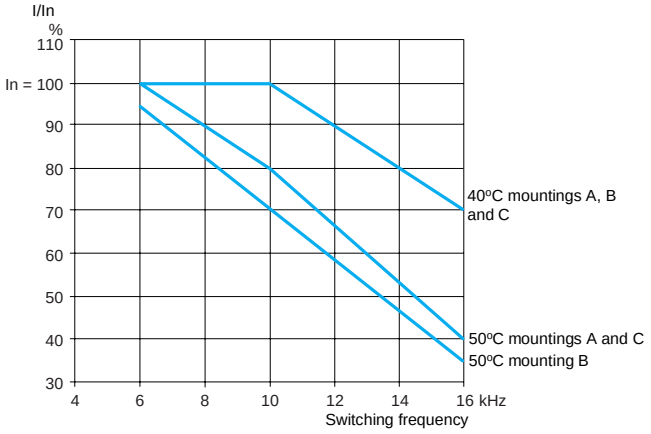

ATV 21HD37N4

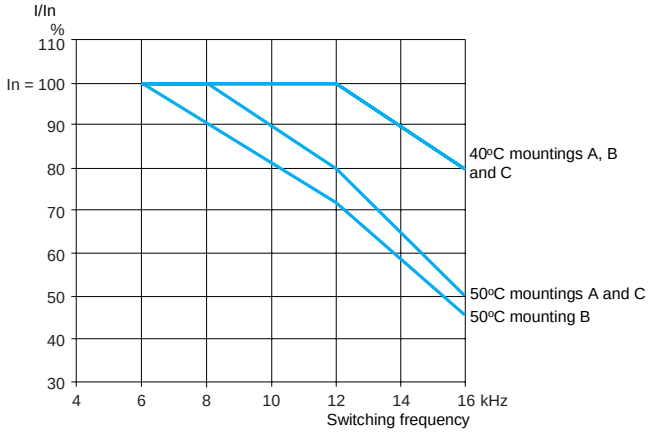

Mounting recommendations (continued)

Derating curves

ATV 21HD45N4

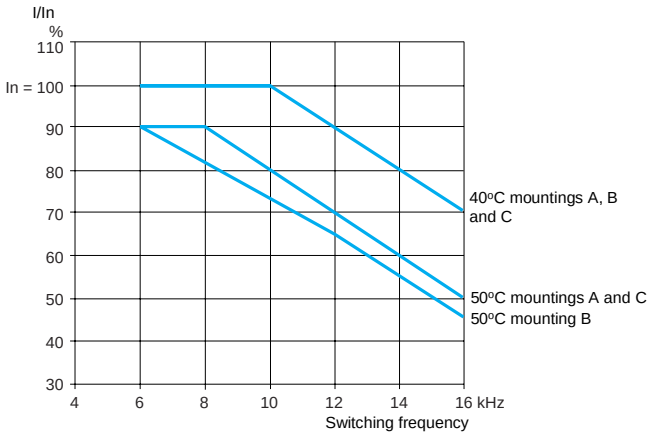

ATV 21HD55N4

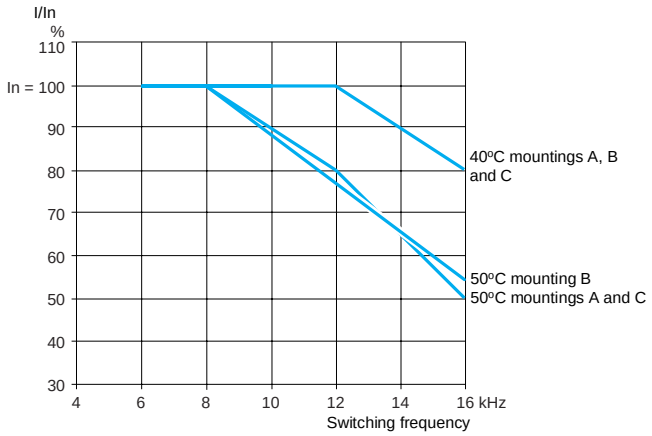

ATV 21HD75N4

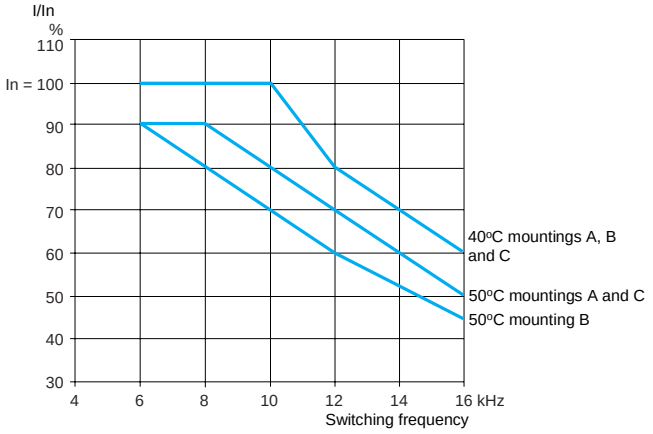

ARCO CONTROL
:051-37133855-6
:09014284236
WWW.ARCOKALA.COM

Mounting recommendations (continued)

Depending on the conditions in which the drive is to be used, its installation will require certain precautions and the use of appropriate accessories.
Install the unit vertically:
- Do not place it close to heating elements.
- Leave sufficient free space to ensure that the air required for cooling purposes can circulate from the bottom to the top of the unit.

ATV 21W●●●N4, ATV 21W●●●N4C

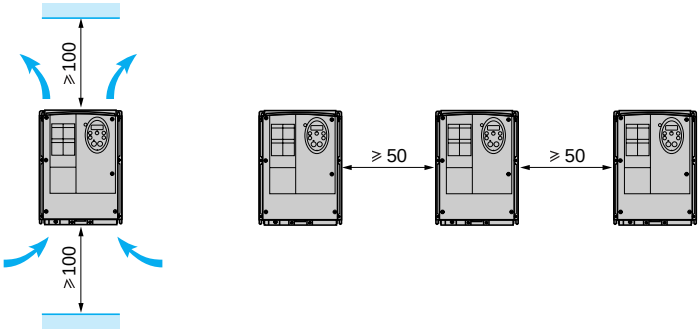

Derating curves

ATV 21W075N4...WU75N4, ATV 21W075N4C...WU75N4C

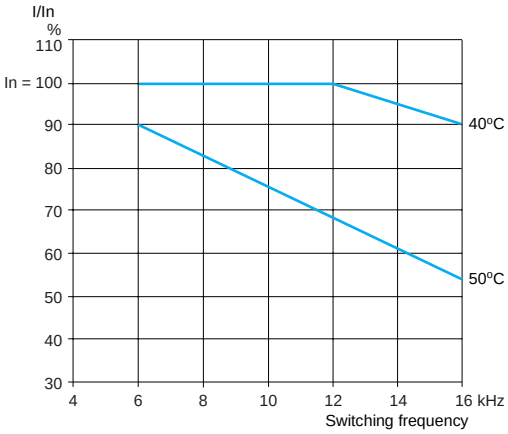

ATV 21WD11N4, ATV 21WD11N4C

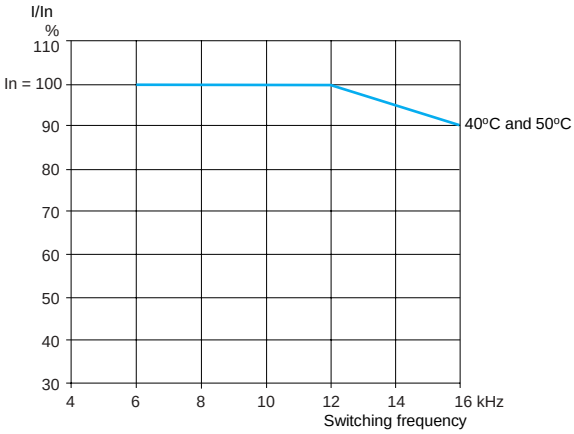

ATV 21WD15N4, ATV 21WD15N4C

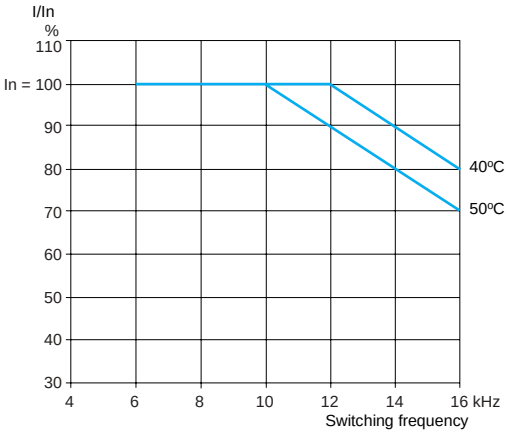

ATV 21WD18N4, ATV 21WD18N4C

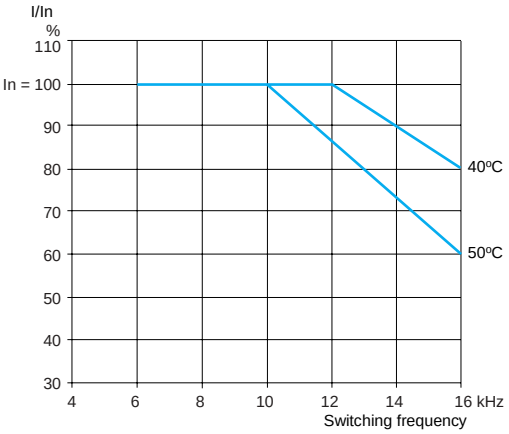

Mounting recommendations (continued)

Derating curves

ATV 21WD22N4, ATV 21WD22N4C

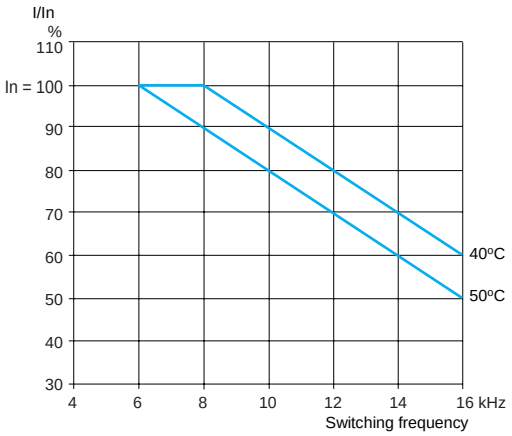

ATV 21WD30N4, ATV 21WD30N4C

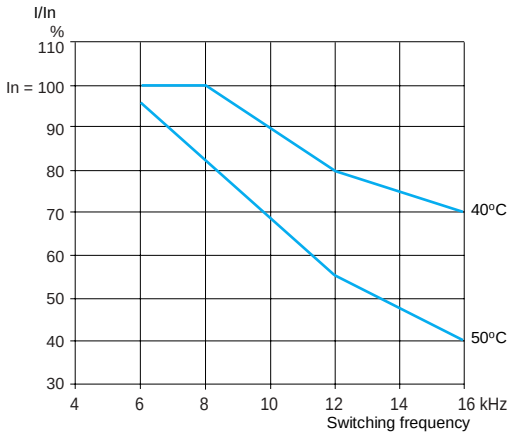

ATV 21WD37N4, ATV 21WD37N4C

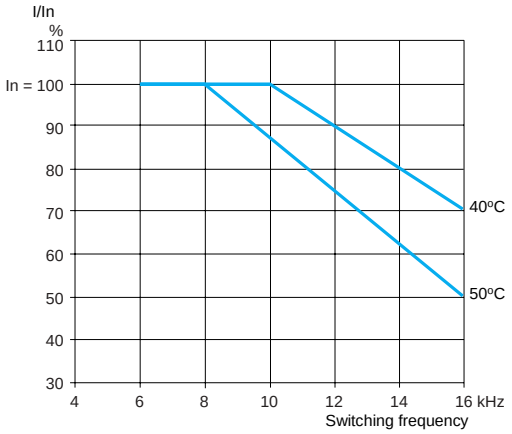

ATV 21WD45N4, ATV 21WD45N4C

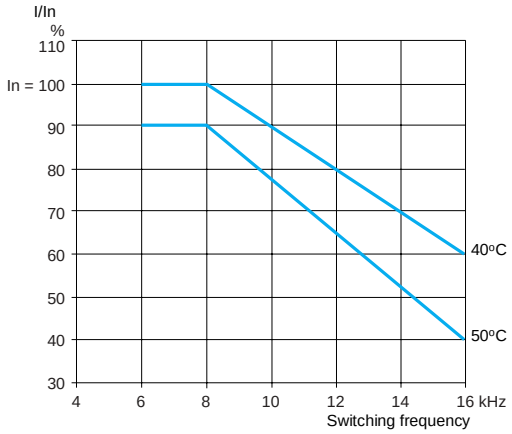

ATV 21WD55N4, ATV 21WD55N4C

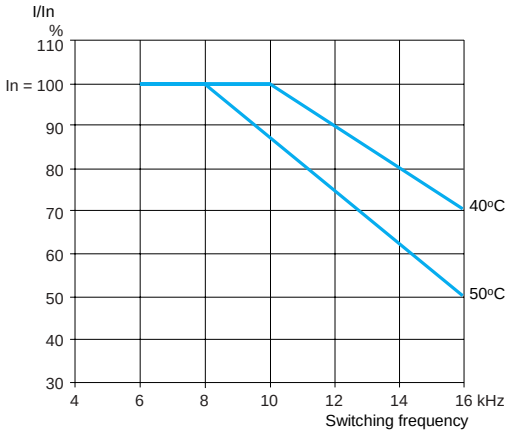

ATV 21WD75N4, ATV 21WD75N4C

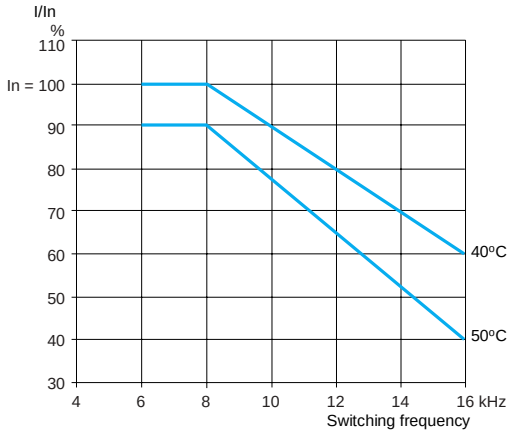

Variable speed drives for asynchronous motors

Altivar 21

UL Type 1/IP 20 drives

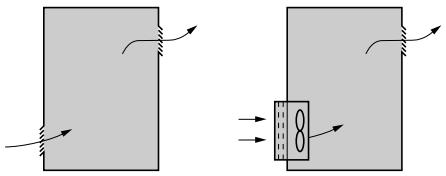

Specific recommendations for mounting in an enclosure *(1)*

Observe the mounting recommendations described on pages 38 to 43.

To ensure proper air circulation in the drive:

- Fit ventilation grilles.
- Ensure that there is sufficient ventilation. If there is not, install a forced ventilation unit with a filter. The openings and/or fans must provide a flow rate at least equal to that of the drive fans (see page 47).
- Use special filters with IP 54 protection.
- Remove the blanking cover from the top of the drive, see page 38.

Power dissipated inside the enclosure *(1)*

For drives	Dissipated power *(2)* W
Three-phase supply voltage: 200…240 V 50/60 Hz	
ATV 21H075M3X	63
ATV 21HU15M3X	101
ATV 21HU22M3X	120
ATV 21HU30M3X	146
ATV 21HU40M3X	193
ATV 21HU55M3X	249
ATV 21HU75M3X	346
ATV 21HD11M3X	459
ATV 21HD15M3X	629
ATV 21HD18M3X	698
ATV 21HD22M3X	763
ATV 21HD30M3X	1085
Three-phase supply voltage: 380…480 V 50/60 Hz	
ATV 21H075N4	55
ATV 21HU15N4	78
ATV 21HU22N4	103
ATV 21HU30N4	137
ATV 21HU40N4	176
ATV 21HU55N4	215
ATV 21HU75N4	291
ATV 21HD11N4	430
ATV 21HD15N4	625
ATV 21HD18N4	603
ATV 21HD22N4	626
ATV 21HD30N4	847
ATV 21HD37N4	976
ATV 21HD45N4	1253
ATV 21HD55N4	1455
ATV 21HD75N4	1945

(1) For ATV 21H●●●M3X and ATV 21H●●●N4 drives only.

(2) This value is given for operation at nominal load and for a switching frequency of 8 or 12 kHz depending on the rating.

Fan flow rate depending on the drive rating

For drives	Flow rate m³/hour
ATV 21H075M3X	22
ATV 21HU15M3X	35
ATV 21HU22M3X	41
ATV 21HU30M3X	50
ATV 21HU40M3X	66
ATV 21HU55M3X	85
ATV 21HU75M3X	118
ATV 21HD11M3X	157
ATV 21HD15M3X	215
ATV 21HD18M3X	239
ATV 21HD22M3X	261
ATV 21HD30M3X	371
ATV 21H075N4	19
ATV 21HU15N4	27
ATV 21HU22N4	35
ATV 21HU30N4	47
ATV 21HU40N4	60
ATV 21HU55N4	74
ATV 21HU75N4	100
ATV 21HD11N4	147
ATV 21HD15N4	214
ATV 21HD18N4	206
ATV 21HD22N4	214
ATV 21HD30N4	290
ATV 21HD37N4	334
ATV 21HD45N4	429
ATV 21HD55N4	498
ATV 21HD75N4	666

Sealed metal enclosure (IP 54 degree of protection)

The drive must be mounted in a dust and damp proof enclosure in certain environmental conditions, such as dust, corrosive gases, high humidity with risk of condensation and dripping water, splashing liquid, etc.
This enables the drive to be used in an enclosure where the maximum internal temperature reaches 50°C.

Calculating the enclosure dimensions *(1)*

Maximum thermal resistance Rth (°C/W)

$$Rth = \frac{\theta - \theta e}{P}$$

θ = maximum temperature inside enclosure in °C
θe = maximum external temperature in °C
P = total power dissipated in the enclosure in W

Power dissipated by drive: see page 46.
Add the power dissipated by the other equipment components.

Useful heat dissipation surface of enclosure S (m²)

(sides + top + front panel if wall-mounted)

$$S = \frac{K}{Rth}$$

K = enclosure thermal resistance per m²

For a metal enclosure:
- K = 0.12 with internal fan
- K = 0.15 without fan

Note: *Do not use insulated enclosures, as they have a poor level of conductivity.*

(1) For ATV 21H●●●M3X and ATV 21H●●●N4 drives only.

Variable speed drives for asynchronous motors
Altivar 21

Summary of functions

Integrated 7-segment display terminal
Presentation page 50

Remote display terminal
Presentation page 50

Simplified start-up
Fan and centrifugal pump page 51
Quick Menu page 51

Operating modes
Default display mode page 52
Parameter adjustment mode page 52
Status monitoring mode page 52

Programming
Presentation page 53

Maintenance, diagnostics
Response to faults or alarms page 54
Fault log page 54
Identification of the software version page 54
Test functions page 54
Display of the I/O states page 54
Display of equipment maintenance alarms page 54

Controlling the drive via its I/O
Presentation page 55

Functions designed specifically for pumping and ventilation applications
Motor control profiles
- Energy saving ratio page 55
- Quadratic ratio (Kn^2) page 55

PID regulator
- Preset PID references page 55
- PID feedback page 56
- PID feedback supervision page 56
- Sleep/Wake-up page 56
- Alarms page 56
- Auto/Man. page 56

Forced operation page 56

Other application functions
2-wire control page 57
3-wire control page 57
Acceleration and deceleration ramps
- Time page 57
- Automatic adaptation page 57
- Switching page 58

Preset speeds page 58
Limiting low speed operating time page 59

ARCO CONTROL
:051-37133855-6
:09014284236
WWW.ARCOKALA.COM

Variable speed drives for asynchronous motors

Altivar 21

Summary of functions (continued)

Other application functions (continued)

Motor control types	
- Sensorless flux vector control	page 59
- 2-point vector control	page 59
- Voltage/frequency ratio	page 59
- Synchronous motor	page 59
Auto-tuning	page 59
Switching frequency, noise reduction	page 59
+/- speed	
- Presentation	page 60
- Reference saving	page 60
Automatic catching of a spinning load with speed detection	page 60
Undervoltage management	page 61
Switching of 2 motor ratings	page 61
Current limit	page 62
Stop types	
- Freewheel stop	page 62
- Stop on ramp	page 62
- DC injection stop	page 62
Motor thermal protection	page 63
Drive thermal protection	page 64
IGBT thermal protection	page 64
Machine protection	page 64
Configuring the drive's fault response	page 64
Resetting resettable faults	page 65
General reset (disables all faults)	page 65
Automatic restart	page 65
PTC probe protection	page 66
IGBT testing	page 66
Resetting operating time to zero	page 66
External fault	page 66
Forced local mode	page 66

Variable speed drives for asynchronous motors

Altivar 21

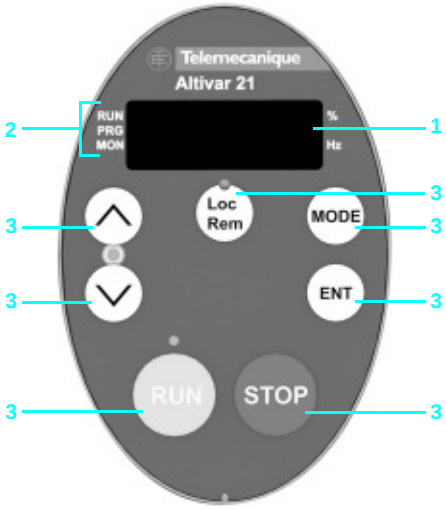

Integrated 7-segment display terminal

Integrated 7-segment display terminal

The Altivar 21 drive has an integrated 7-segment display terminal.
This can be used to:
- Display status and faults
- Access and modify parameters
- Check your installation easily in local mode using the Loc/Rem key 3.

Description

1 Display:
- Four 7-segment displays visible at 5 m
- Display of numeric values and codes
- The display flashes when a value is stored
- Unit rating of displayed value
- The display flashes to indicate a fault on the drive

2 Display of drive status:
- RUN: Run command is active or speed reference present
- PRG: Drive in automatic mode
- MON: Drive in monitoring mode
- Loc: Drive in local mode

3 Use of keys:
- Loc/Rem: Switching of the drive command, locally or remotely.

As a “local” command, the speed reference can be modified using the ∧ and ∨ keys; the LED located between these keys lights up.
- ∧ and ∨: Vertical navigation in the menu, editing of values or speed reference depending on the mode selected
- MODE: Selection of one of the following modes:
  - Default display mode
  - Adjustment mode
  - Status monitoring mode
- RUN: Local motor run command; LED indicates that the RUN key is active
- STOP: Local control of motor stopping/drive fault clearing
- ENT: Saves the current value or the selected function

Remote display terminal

A remote display terminal is available as an option. It can be mounted on an enclosure door and allows access to the same functions as the integrated 7-segment terminal.
It is also possible to download and store 3 configuration files using its “COPY MODE” (see page 19).

Variable speed drives for asynchronous motors

Altivar 21

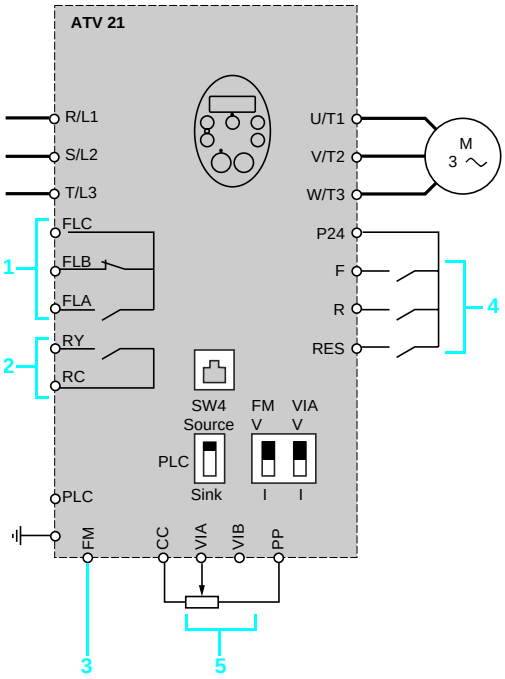

Factory-set configuration

Simplified start-up

Fan and centrifugal pump

The Alitvar 21 drive is factory-configured to allow a simplified start-up, without the need for any adjustment.

The following conditions must be met to be able to use this simplified start-up function:

- ■ The drive load must be a fan or a centrifugal pump
- ■ The motor rating must match the drive rating
- ■ Connection must be according to the diagram opposite:
- □ 1 FLA, FLB and FLC for the fault relay
- □ 2 RY and RC for the low speed reached relay
- □ 3 FM for the analog output
- □ 4 F, R and RES for the logic inputs:
  - F for forward operation
  - R for preset speed
  - RES for fault reset
- □ 5 VIA and VIB for the analog inputs:
  - VIA for the speed reference 0...10 V
  - VIB is not assigned

Quick Menu

The Quick Menu is used to:

- ■ Access the essential parameters of your application quickly
- ■ Enter the motor rating plate data (nominal voltage, nominal frequency, thermal current, etc.), so that the motor parameters can be adjusted quickly, thereby benefiting from optimum motor performance
- ■ Protect the motor by setting the drive's integrated electronic thermal overload relay

Parameters which can be accessed in the Quick Menu (AUF):

Parameter	Description
AU1	Automatic acceleration/deceleration
ACC	Acceleration
dEC	Deceleration
LL	Low speed
UL	High speed
tHr	Motor thermal current
FM	Analog output
Pt	U/F Profile
uL	Nominal motor frequency
uLu	Nominal motor voltage

ARCO CONTROL
:051-37133855-6
:09014284236
WWW.ARCOKALA.COM

Variable speed drives for asynchronous motors
Altivar 21

Operating modes

The Altivar 21 drive has the following operating modes:
- Default display mode
- Parameter adjustment mode
- Status monitoring mode

It is easy to switch between these different modes simply by using the "MODE" key:

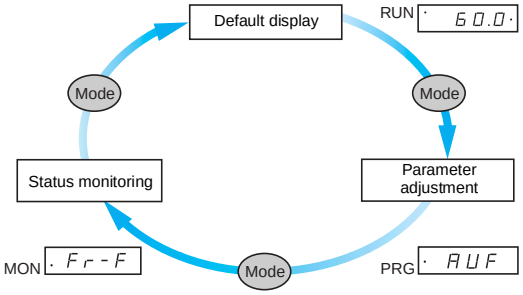

Default display mode

This mode is automatically activated on power-up.
It is used to display a drive variable (current, speed, etc.), alarms and faults.

Parameter adjustment mode

This mode provides a simple start-up function for the drive via direct access to the standard parameters:
- Acceleration
- Deceleration
- Macro-configuration
- Control mode
- Motor rating plate
- Etc.

The standard parameters are identified by an alphanumerical code (ACC, dEC, etc.)

This mode also provides access to the advanced parameters required for setting up and optimizing advanced functions.
These parameters are identified by a numerical code (F100 to F900).

Status monitoring mode

This mode is used to display all the drive variables, such as the I/O state, most recent faults, etc.

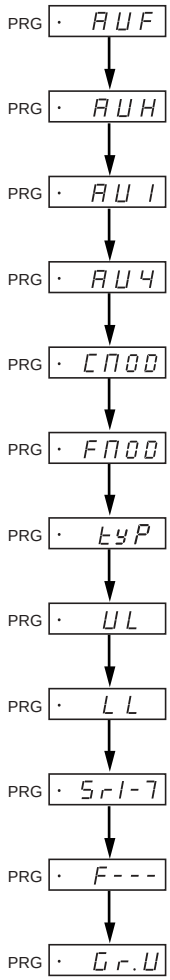

Main menus of the integrated 7-segment display terminal

Programming

The main menus accessible from the integrated 7 segments terminal are described in the table below:

Menu type	Function
AUF	Accessing the Quick Menu
AUH	Accessing the most recently modified parameters
AU1	Selecting the ramp type (fixed or automatically adapted)
AU4	Selecting the macro-configurations
CMOD	Selecting the command channel
FMOD	Selecting the reference channel
tyP	Selecting the factory settings or the customer configuration
UL	Setting high speed
LL	Setting low speed
Sr1-7	Accessing preset speeds
F---	Accessing advanced parameters
Gr.U	Accessing parameters that are different to the factory settings

Variable speed drives for asynchronous motors
Altivar 21

Maintenance, diagnostics

New functions have been added to the Altivar 21 drive to enable it to provide quick and simple maintenance, ultimately boosting productivity:

■ **Response to faults or alarms**
It is possible to use the alarm management or drive operation configuration functions to take corrective measures before stopping the machine.

■ **Fault log**
When a fault occurs, values such as speed, current, thermal state and timer are saved and restored in the fault log.
The last 4 faults are stored.

■ **Identification of the software version**
It is possible to display the relevant serial numbers and software versions, thereby helping to manage the equipment base.

■ **Test functions**
The Altivar 21 drive includes the following test functions:
□ Identifying any motor short-circuit before start-up
□ Running, via the 7-segment display terminal, the remote display terminal or the PC software, automatic procedures during maintenance operations aimed at testing:
- the motor
- the drive power components

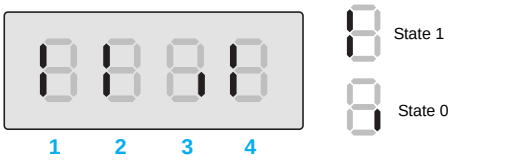

Example of the I/O state display

■ **Display of the I/O states**
It is possible to display the activation or deactivation state of each input/output.
1 VIA: State 1
2 RES: State 1
3 R: State 0
4 F: State 1

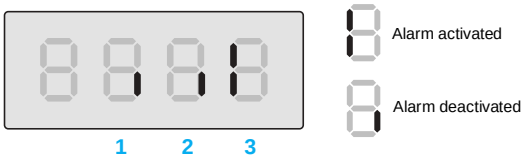

Example of alarms display

■ **Displaying equipment maintenance alarms**
Three alarms show if it is necessary to replace the drive or some of its components.

The drive automatically calculates their service lives by configuring their average annual operating temperature.
1 Drive: Alarm deactivated
2 Capacitor: Alarm deactivated
3 Fan: Alarm activated

Variable speed drives for asynchronous motors
Altivar 21

Controlling the drive via its I/O

Control signals are transmitted via cable to the I/O. Functions are assigned to logic inputs, analog inputs, etc.
A logic input can be assigned to more than one function. This means that two functions can be controlled using a single signal, thereby limiting the number of inputs required.

The Altivar 21 drive I/O can be configured independently from each other. For instance:
□ A time delay can be applied when it comes to reading the logic inputs, so as to avoid any bounce-back from certain switches.
□ Transforming incoming signals on the analog inputs can help the drive fully adapt to the control devices and applications:
- Minimum and maximum values for the input signal
- Input filtering in order to eliminate unwanted interference from the signals received
- Magnifying glass effect through delinearizing the input signal in order to increase the precision with small amplitude signals
- “Pedestal” and “Deadband” functions for signals in order to prevent low speed operations which can have an adverse effect on the application
□ Transforming analog outputs which transfer information sent by the drive to other devices (display units, drives, PLCs, etc.):
- voltage or current output signal
- minimum and maximum values for the output signal
- output signal filtering

Logic outputs can be delayed on activation and deactivation. The output state can also be configured when the signal is active.

Functions designed specifically for pumping and ventilation applications

■ **Motor control profiles**
□ **Energy saving ratio**
This type of command makes it possible to optimize the energy consumed based on the load applied to the machine.

□ **Quadratic ratio (Kn^2)**
This type of command is optimized for centrifugal pumps and fans.

■ **PID regulator**
This can be used to regulate a process with a reference and feedback given by a sensor.
Function suitable for regulation in buildings.

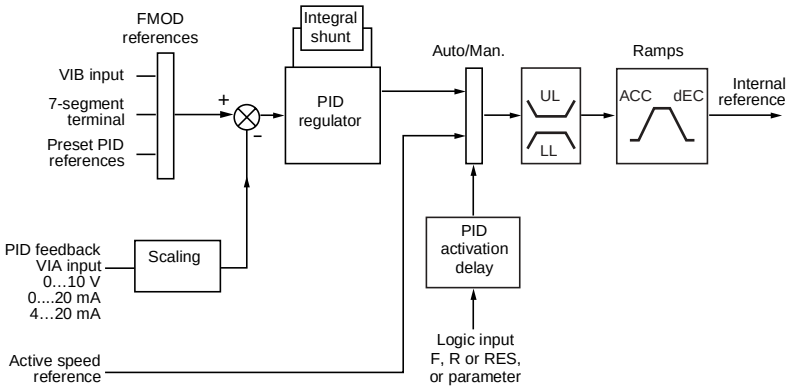

ACC: Acceleration, dEC: Deceleration, LL: Low speed, UL: High speed.

□ **Preset PID references**
2 to 7 PID references are available.

Variable speed drives for asynchronous motors
Altivar 21

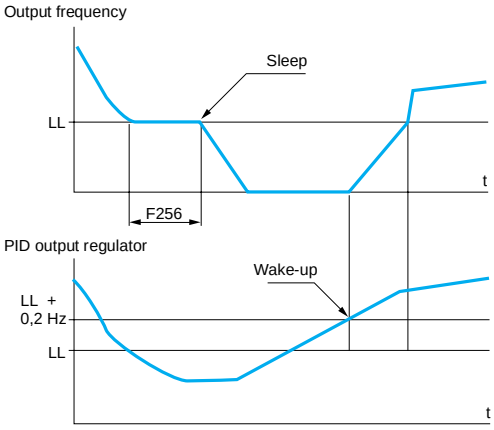

LL: Low speed

Example of the "sleep/wake-up" function in operation

■ **PID regulator (continued)**

□ **PID feedback**

PID feedback can be assigned to the VIA analog input. It can also be transmitted by a communication network (network AI).

The following 4 functions can be used in combination with the PID regulator:

□ **PID feedback supervision**

□ **Sleep/Wake-up**

This function supplements the PID regulator, in order to avoid prolonged operation at excessively low speeds when neither useful nor desirable.
It stops the motor after a period of operation at reduced speed. This duration (parameter F256) and speed (parameter LL) can be adjusted.
It restarts the motor if the PID error or feedback exceeds an adjustable threshold (parameter LL +0.2 Hz).

□ **Alarms**

Minimum and maximum PID regulator feedback monitoring thresholds and PID regulator error monitoring threshold.

□ **Auto/Man.**

This can be used to switch from speed regulation mode (Man.) to PID regulation mode (Auto). A logic input or command word bit is used for switching.

Speed regulation mode (Man.)

The manual reference is transmitted via the terminals (analog inputs, preset speeds, etc.).
With manual switching, the speed reference changes according to the ACC and dEC ramp times.

PID regulation mode (Auto)

In automatic mode it is possible to:
- Adapt the references and feedback to the process (transformation)
- Adjust the proportional, integral and derivative gains
- Shunt the integral
- Use the “alarm” on the logic output or display it on the 7-segment display terminal or the remote display terminal, if the threshold is exceeded (Max. feedback, Min. feedback and PID error)
- Display the PID reference, PID feedback, PID error and PID output on the display terminal and assign them to an analog output
- Apply a ramp to the PID output

The motor speed is limited to low speed (LL) and high speed (UL).

■ **Forced operation**

Combined with the function of inhibiting all faults, this function makes it possible to force the running order in a particular direction and the reference to a configured value.

ARCO CONTROL
:051-37133855-6
:09014284236
WWW.ARCOKALA.COM

Variable speed drives for asynchronous motors
Altivar 21

Other application functions

■ 2-wire control
This function is used to control the direction of operation by means of a stay-put contact.
It is enabled by means of 1 or 2 logic inputs (non-reversing and preset speed).

This function is suitable for all non-reversing applications, by detection of the logic input state.

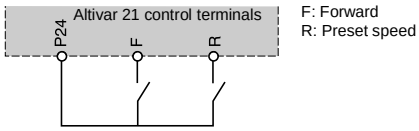

Wiring diagram for 2-wire control

■ 3-wire control
This function is used to control the operating and stopping direction by means of pulsed contacts. It is enabled by means of 2 or 3 logic inputs.

This function is suitable for all non-reversing applications and stopping.

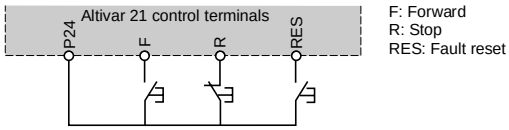

Wiring diagram for 3-wire control

■ Ramps
□ Acceleration and deceleration ramp times
This function is used to define acceleration and deceleration ramp times according to the application and the machine dynamics.

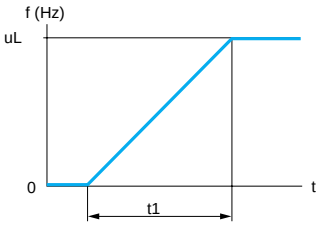

Linear acceleration ramp

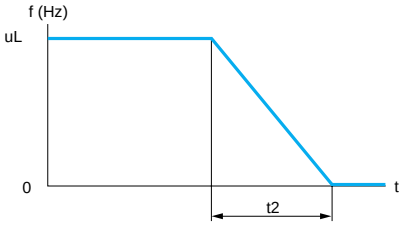

Linear deceleration ramp

uL: Nominal motor frequency
t1: Acceleration time
t2: Deceleration time
t1 and t2 can be set independently from 0.01 to 3200 s (according to one of the following ramp increments: 0.01 s, 0.1 s or 1 s);
Factory setting: 10 s.

□ Automatic adaptation of acceleration and deceleration ramps
This function can be used to adapt the acceleration and deceleration ramps automatically based on the load.
The acceleration and deceleration times are reduced for low loads and increased for high loads.

Low load

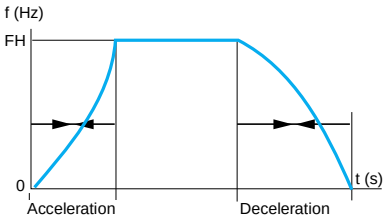

FH: Maximum output frequency

High load

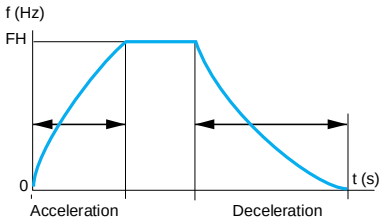

FH: Maximum output frequency

Variable speed drives for asynchronous motors
Altivar 21

■ **Ramps (continued)**

□ **Ramp switching**

This function is used to switch two acceleration and deceleration ramp times, which can be adjusted separately.
Ramp switching can be enabled by:
- a logic input
- a frequency threshold
- a command word bit

This function is suitable for all machines with fast steady state speed correction.

■ **Preset speeds**

This can be used to switch preset speed references.
Choice of seven preset speeds.
Enabled by logic inputs, R and RES, and by VIA configured as a logic input.
The preset speeds are adjustable in increments of 0.1 Hz, from low speed to high speed.

This function is suitable for machines with several operating speeds.

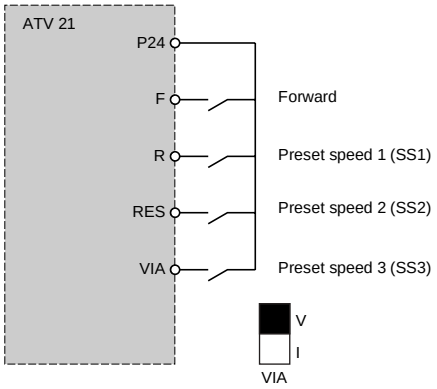

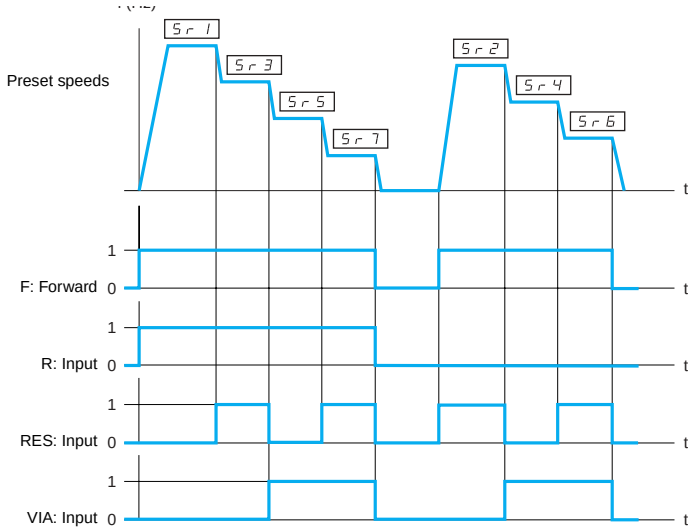

Example of operation with 7 preset speeds

Variable speed drives for asynchronous motors
Altivar 21

■ **Limiting low speed operating time**
The motor is stopped automatically after a period of operation at low speed (LL) with a zero reference and a run command present.
This time can be set between 0.1 and 600 seconds (0 corresponds to an unlimited time). Factory setting 0 s. The motor restarts automatically on the ramp when the reference reappears or if the run command is interrupted and then re-established.

Function suitable for automatic Stops/Starts.

■ **Motor control types**
□ **Sensorless flux vector control**
This control type can be used with a single motor or motors connected in parallel.

□ **2-point vector control**
The zone for operating at constant power can be optimized by defining an additional point in the control profile.
This function should be used with motors offering a two-part defluxing zone.
It can be used to limit the voltage at the motor terminals when the motor is being powered by a high line supply.

□ **Voltage/frequency ratio**
This control type is particularly suitable for special motors (high-speed motors, synchronized asynchronous motors, etc.). The ratio can be adjusted by 2 points and used to achieve output frequencies of up to 200 Hz.

□ **Synchronous motor**
This control type is exclusively reserved for controlling open loop synchronous permanent magnet motors with sinusoidal electromotive force (EMF).

■ **Auto-tuning**
Auto-tuning can be performed:
□ Using a dialogue tool (integrated 7-segment display terminal, remote display terminal or PC software)
□ Via a communication network

■ **Switching frequency, noise reduction**
The switching frequency setting permits a reduction in the noise generated by the motor for any application requiring a low level of noise.
The switching frequency is modulated randomly in order to avoid resonance. This function can be disabled if it causes instability.
Switching the intermediate DC voltage at high frequency is useful for supplying the motor with a current wave having little harmonic distortion.
The switching frequency is adjustable during operation to reduce the noise generated by the motor.
Value: 6 to 16 kHz

Variable speed drives for asynchronous motors
Altivar 21

■ **+/- speed**
Used to increase or decrease a speed reference by means of 1 or 2 logic inputs, with or without the last reference being saved (motorized potentiometer function).
This function is suitable for centralized control of a machine with several sections operating in one direction.

Two logic inputs are required in addition to the operating direction for +/- speed control.

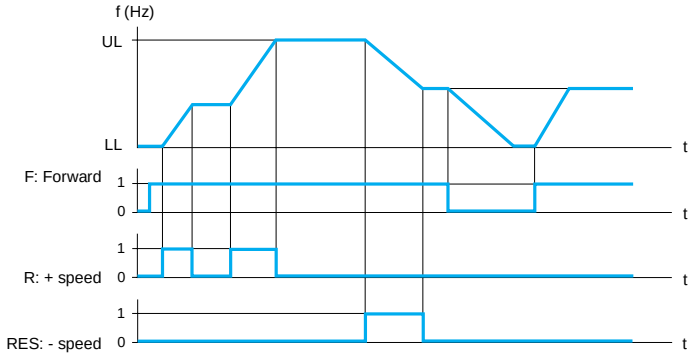

LL: Low speed, UL: High speed

□ **Reference saving**
This function is associated with +/- speed control.
This can be used for reading and saving the last speed reference prior to the loss of the run command or line supply. The saved reference is applied at the next run command.

■ **Automatic catching of a spinning load with speed detection** (“catch on the fly”)
This function is used to restart the motor smoothly after one of the following events, provided the run command is still present:
- □ loss of line supply or power off
- □ fault reset or automatic restart
- □ freewheel stop

On disappearance of the event, the effective speed of the motor is detected in order to restart on a ramp at this speed and return to the speed reference. The speed detection time can reach 0.5 s.

This function is suitable for machines which exhibit low motor speed loss during a power failure (high-inertia machines such as centrifuges, etc.).

ARCO CONTROL
:051-37133855-6
:09014284236
WWW.ARCOKALA.COM

Variable speed drives for asynchronous motors
Altivar 21

■ **Undervoltage management**
Depending on the application, it is possible to configure the Altivar 21's response to undervoltages or power failures.
If the drive locks as a result, management of the fault relay can be configured (open or not). If the fault relay does not open an alarm is shown.

The Altivar 21 drive can also be configured to prevent the drive locking (using an alarm):
□ Controlled stop according to the type of stop configured
□ Deceleration based on a ramp which it automatically adapts to maintain the DC bus voltage, thereby preventing the drive from locking in fault mode
□ Instant IGBT (inverter bridge) loss followed by power supplied to the motor as soon as the line voltage has reappeared. This function can be used to prevent the Altivar 21 drive being reinitialized.

■ **Switching of 2 motor ratings**
This function is used to switch two sets of 10 motor parameters:
□ All or some of the motor parameters can be switched on stopping
□ Some of these parameters can be switched during operation
A logic input or command word bit is used to switch the sets.

Command and reference switching via logic input
This function is used to switch commands (terminal, logic inputs) and references (speed, PID, etc.) via a logic input.

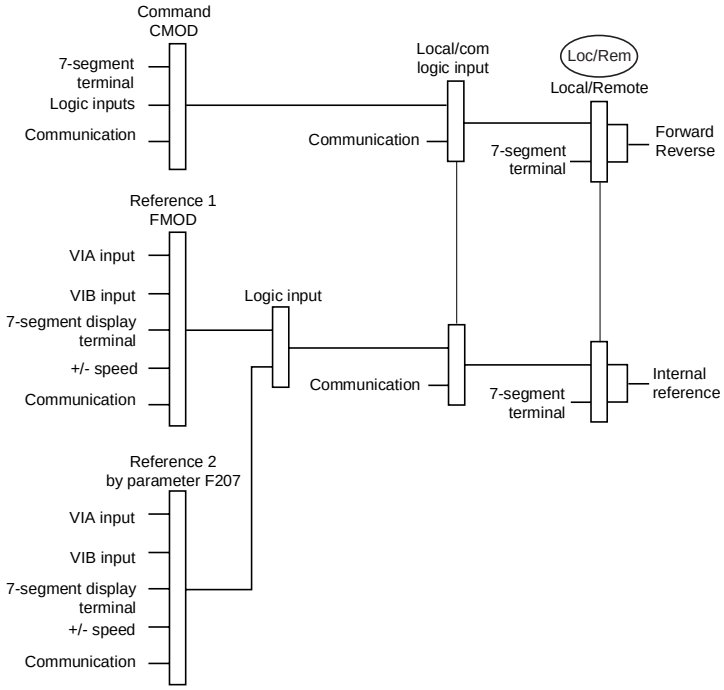

Example of command and reference switching

■ **Current limit**
A second current limit can be configured up to 1.1 times the drive nominal current and it can be used to limit the rise in motor temperature and the torque.
Switching between the two current limits can be enabled via:
□ a logic input
□ a command word bit

■ **Stop types**
□ **Freewheel stop**
This function stops the motor by resistive torque if the motor power supply is cut.

A freewheel stop is achieved:
- by configuring a normal stop command as a freewheel stop (on disappearance of a run command or appearance of a stop command)
- by enabling a logic input
- by activating a command word bit

□ **Stop on ramp**
This stops the motor according to the deceleration ramp
A stop on ramp is achieved:
- by enabling a logic input
- by activating a command word bit

□ **DC injection stop**
This can be used to brake high-inertia machines at low speed or maintain torque on stopping.
A DC injection stop is achieved:
- by configuring a normal stop as a DC injection stop (on disappearance of a run command or appearance of a stop command)
- by enabling a logic input
- by activating a command word bit

The DC value and the standstill braking time are adjustable.

Variable speed drives for asynchronous motors
Altivar 21

■ **Motor thermal protection**
Motor thermal protection is provided by the drive:
□ directly, through PTC probes located in the motor windings
□ indirectly, via the integrated thermal relay. Indirect thermal protection is implemented via continuous calculation of its theoretical temperature rise.

The microprocessor calculates the theoretical temperature rise of the motor based on various elements:
□ the operating frequency
□ the current taken by the motor
□ the operating time
□ the maximum ambient temperature around the motor (40°C)
□ the type of motor ventilation (self-cooled or force-cooled)

Thermal protection is adjustable from 0.5 to 1.1 times the nominal current, depending on the drive type. It must be adjusted to the nominal current indicated on the motor rating plate.

Note: *The motor thermal state memory returns to zero when the drive control part is switched off.*

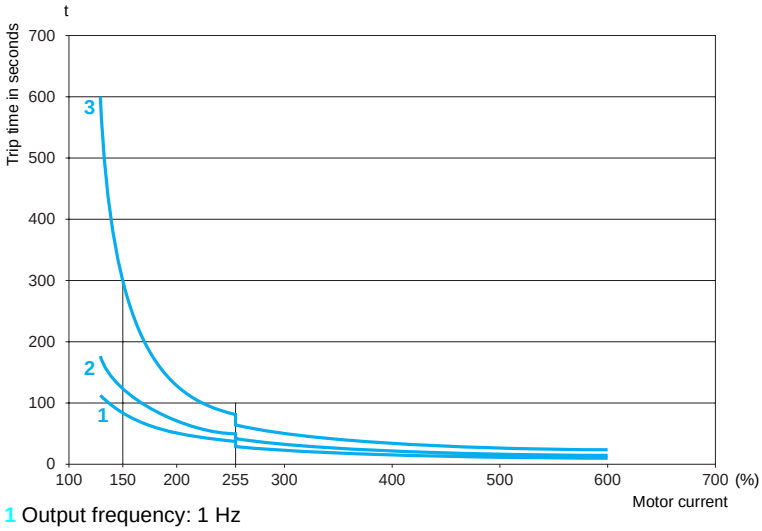

1 Output frequency: 1 Hz
2 Output frequency: 10 Hz
3 Output frequency: 30 Hz and above

Motor thermal protection curves

□ Self-cooled motors:
The tripping curves vary with the motor frequency.

□ Force-cooled motors:
Only the 30 Hz and higher tripping curve should be considered, whatever the motor frequency.

Variable speed drives for asynchronous motors
Altivar 21

■ **Drive thermal protection**
The drive thermal protection is provided by a PTC probe mounted on the heatsink or integrated with the power module.

■ **IGBT thermal protection**
The drive manages the switching frequency intelligently according to the IGBT temperature.
If the drive's current rating is exceeded (e.g.: current higher than the nominal drive current for a zero stator frequency), an alarm is displayed and a timer increases for as long the alarm is present.

■ **Machine protection**
This is used to detect under- and/or overload.

■ **Configuring the drive's fault response (fault management)**
Different responses can be configured for the drive in the event of a resettable fault occurring:
- freewheel stop
- drive switches to the fallback speed
- drive maintains the speed at which it was operating when the fault occurred until the fault disappears
- stop on ramp
- DC injection stop
- no stop (alarm activated)

List of resettable faults:
- external fault
- output phase loss
- auto-tuning fault
- loss of 4-20mA
- PTC probe
- drive overheating
- motor overload if the thermal state is less than 100%
- line overvoltage
- current limit
- IGBT overheating
- communication faults (Modbus and other communication networks)
- PI supervision

Variable speed drives for asynchronous motors
Altivar 21

■ **Resetting resettable faults**
This can be used to remove the last fault using a logic input, command word bit or the STOP/RESET key on the display terminal.
The restart conditions after a reset to zero are the same as those of a normal power-up.
List of resettable faults, see “Configuring the drive’s fault response”.
Line supply undervoltage and input phase loss faults are reset automatically when the line supply is restored.

Function suitable for applications where drives are difficult to access, such as when a drive is placed on a moving part.

■ **General reset (inhibits all faults)**
This function inhibits all faults, including thermal protection (forced operation), which can destroy the drive.

This function is suitable for applications where restarting is vital (smoke extraction system, machines with hardening products that need to be removed).
The function is enabled by a logic input.

Fault monitoring is active if the logic input is at state 1.
All faults are reset on a change of state ↑ of the logic input.

Note: *Use of this function invalidates the guarantee.*

■ **Automatic restart**
This function enables the drive to be restarted automatically after it has locked in fault mode, provided the relevant fault has disappeared and that the other operating conditions permit a restart.
This restart is performed by a series of automatic attempts separated by increasingly longer waiting periods of 1, 2, 3 s, then 10 s, up to the 10th attempt.
If the drive has not restarted after the configured time, it will lock and the procedure is abandoned until it has been powered off and on again.

The faults which permit this type of restart are:
- line overvoltage
- motor thermal overload
- drive thermal overload
- DC bus overvoltage
- line phase failure
- external fault
- loss of 4-20mA
- PTC probe
- serial link
- current limit
- output phase loss
- line voltage too low. For this fault, the function is always active, even if it is not configured.
- PI supervision,
- fault caused by Modbus or other communication networks. These faults are reset automatically as soon as the command word or frequency reference is sent to the drive.

For these types of fault, the relay configured as a fault relay remains activated if the function is configured. The speed reference and direction of operation must be maintained for this function.

This function is suitable for machines or installations which are in continuous operation or are not monitored, and where a restart will not endanger equipment or personnel in any way.

ARCO CONTROL
:051-37133855-6
:09014284236
WWW.ARCOKALA.COM

Variable speed drives for asynchronous motors
Altivar 21

■ **PTC probe protection**
The probes can be connected directly to the drive control card or to the communication cards.
The way in which a temperature fault is recorded by the drive can be configured by default or as an alarm.

■ **IGBT testing**
When enabled, this function tests every IGBT and the motor connections in order to detect a short-circuit or an open circuit. This test is run every time the drive is powered on and before each motor start.

■ **Resetting operating time to zero**
The drive operating and power-up time can be reset.

■ **External fault**
This function can lead to the drive locking if a fault occurs in the machine. This fault is flagged on the drive display unit. The fault is flagged if the signal is at 1 or at 0, according to the function configuration.

■ **Forced local mode**
Forced local mode imposes control via the logic input and prohibits all other control modes.
Switching to forced local mode may be activated via:
- a logic input
- a function key on the display terminal

The following references and commands are available for forced local mode:
- references VIA, VIB, and command via logic inputs
- reference and command via the display terminal

Variable speed drives for asynchronous motors

Altivar 21

Function compatibility table

■ **Configurable I/O**

The table below lists the incompatibilities between the functions and shows the priority functions.
Stop functions have priority over run commands.
The selection of functions is limited:

- by the number of drive I/O which can be reassigned
- by the incompatibility of certain functions with one another

Functions	PID regulator	Preset speeds	+/- speed	Freewheel stop	DC injection stop	Forced operation
PID regulator			⊖			→
Preset speeds			⊖			→
+/- speed	⊖	⊖				⊖
Freewheel stop					←	→
DC injection stop				↑		⊖
Forced operation	↓	↓	⊖	↓	⊖	

⊖ Incompatible functions

Compatible functions

Not applicable

Priority functions (functions which cannot be active at the same time)

← The arrow indicates which function has priority.
For example, the Freewheel stop function has priority over the DC injection stop function.

ARCO CONTROL
:051-37133855-6
:09014284236
WWW.ARCOKALA.COM

Starters, drives and communication

Communication via Modbus serial link

Presentation

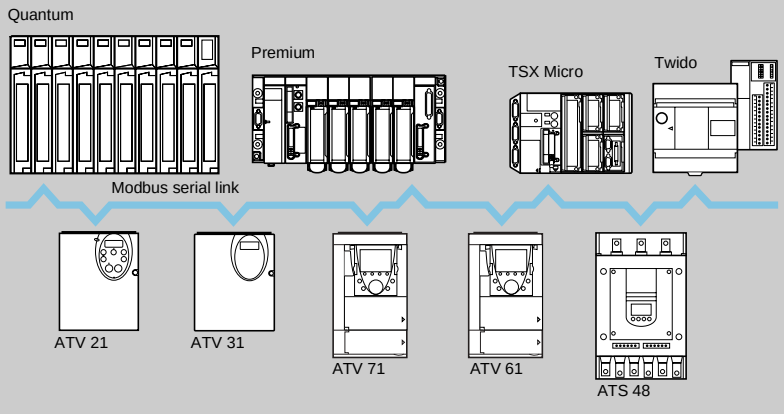

Modbus is a master/slave protocol.

Two exchange mechanisms are possible:
■ Request/response: The request from the master is addressed to a given slave. The master then waits for the response from the slave which has been interrogated.
■ Broadcasting: The master broadcasts a request to all the slave stations on the serial link, which execute the command without transmitting a response.

The Altistart 48 soft start/soft stop units and the Altivar 21, Altivar 31, Altivar 61 and Altivar 71 variable speed drives have the Modbus protocol integrated as standard.

The Altistart 48 soft start/soft stop unit and the Altivar 21 and Altivar 31 variable speed drives are connected to the Modbus serial link via their terminal ports.

The Altivar 61 and Altivar 71 variable speed drives have 2 integrated communication ports:
■ A terminal port for connecting the graphic display terminal or an industrial HMI terminal (Magelis type)
■ A Modbus serial link port
As an option, they can also be equipped with a VW3 A3 303 Modbus/Uni-Telway communication card which offers additional characteristics (4-wire RS 485, ASCII mode, etc.).

Characteristics

Type of device			**ATS 48**	**ATV 21**	**ATV 31**	**ATV 61, ATV 71**		
Type de connection			**Terminal port**				**Modbus serial link port**	**Communication card**
Structure	Connector		RJ45	RJ45	RJ45	RJ45	RJ45	9-way female SUB-D
	Topology		Serial link					
	Physical interface		2-wire RS 485					2-wire or 4-wire RS 485
	Access method		Master/slave					
	Transmission mode		RTU					RTU or ASCII
	Data rate	38.4 Kbps	–	–	–	–	●	–
		19.2 or 9.6 Kbps	●	●	●	●	●	●
		4.8 Kbps	●	–	●	–	●	●
	Medium		Double shielded twisted pair					
	Number of subscribers		18, 27 or 31 slaves, depending on polarization *(1)*					
	Type of polarization		4.7 kΩ pulldown resistors	No pulldown				Configurable. No pulldown or 4.7 kΩ pulldown resistors
	Length of serial link		1000 or 1300 m excluding tap links, depending on polarization *(1)*					
	Tap link		3 or 20 m maximum, depending on polarization *(1)*					

(1) See the configuration table on page 69.

Connections: pages 69 and 70
References: pages 69 to 71

Starters, drives and communication

Communication via Modbus serial link

Configuration on the basis of polarization

The specification of the physical layer provided by standard RS 485 is incomplete.
Various polarization diagrams can therefore be applied depending on the environment in which the equipment is to be used.
The Modbus standard specifies the polarization exactly *(1)*.

		Master	
		With or without polarization 4.7 kΩ	**With polarization 470 Ω**
Slave	**Without polarization**	Configuration not recommended.	Modbus type configuration 31 slaves. Length of serial link: 1300 m Tap link: 3 m maximum RC line terminators (R =120 Ω, C = 1 nF)
	With polarization 4.7 kΩ	Uni-Telway type configuration 27 slaves Length of serial link: 1000 m Tap link: 20 m maximum RC line terminators (R =120 Ω, C = 1 nF)	Mixed configuration 18 slaves Length of serial link: 1000 m Tap link: 20 m maximum RC line terminators (R =120 Ω, C = 1 nF)

PLC

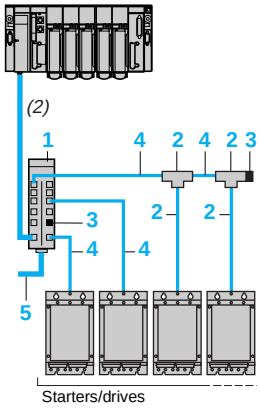

Connection elements for RJ45 wiring system

Card

Description	Used with	Reference	Weight kg
Communication card equipped with a 9-way female SUB-D connector	ATV 61, ATV 71	**VW3 A3 303**	0.300

Accessories

Description		No.	Unit reference	Weight kg
Modbus splitter block 10 RJ45 connectors and 1 screw terminal block		1	**LU9 GC3**	0.500
Modbus T-junction boxes	With integrated cable (0.3 m)	2	**VW3 A8 306 TF03**	0,190
	With integrated cable (1 m)	2	**VW3 A8 306 TF10**	0,210
Line terminators for RJ45 connector *(3)*	R = 120 Ω, C = 1 nF	3	**VW3 A8 306 RC**	0,010
	R = 150 Ω	3	**VW3 A8 306 R**	0.010

522184

LU9 GC3

Cables

Description	Use From	 To	No.	Length m	Reference	Weight kg
Cables for Modbus serial link 2 RJ45 connectors	ATS 48, ATV 21, ATV 31, ATV 61, ATV 71 (terminal ports or Modbus serial liink ports)	Modbus splitter block LU9 GC3	4	0.3	**VW3 A8 306 R03**	0.025
				1	**VW3 A8 306 R10**	0.060
				3	**VW3 A8 306 R30**	0.130
	Modbus T-junction box VW3 A8 306 TF●● Modbus splitter block LU9 GC3	Modbus T-junction box VW3 A8 306 TF●● Modbus splitter block LU9 GC3				
Cables for Modbus serial link One 9-way male SUB-D connector 1 RJ45 connector	ATV 61, ATV 71 (+ communication card VW3 A3 303)	Modbus splitter block LU9 GC3	4	1	**VW3 A58 306 R10**	0.080
				3	**VW3 A58 306 R30**	0.150
Double shielded twisted pair cables	Modbus splitter block LU9 GC3 (screw terminals)	Modbus splitter block LU9 GC3 (screw terminals)	5	100	**TSX CSA 100**	5.680
				200	**TSX CSA 200**	10.920
				500	**TSX CSA 500**	30.000

532174

VW3 A8 306 TF●●

(1) Standard defined in 2002, available on the website: www.modbus.org.
(2) The cable for connecting the PLC and the splitter block depends on the type of PLC; please consult our "Automation platform Modicon Premium – Unity & PL7 software", "Automation platform Modicon Quantum", "Automation platform Modicon TSX Micro – PL7 software" and "Automation and relay functions" specialist catalogues.
(3) Sold in lots of 2.

Presentation:
page 68

Characteristics:
page 68

Starters, drives and communication

Communication via Modbus serial link

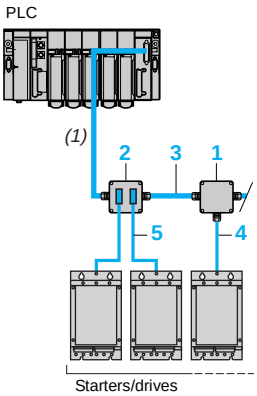

533178

TSX SCA 50

533179

TSX SCA 62

Connection elements using tap junctions

Accessories

Description	No.	Reference	Weight kg
Tap junction 3 screw terminals, RC line terminator	1	**TSX SCA 50**	0.520
Subscriber socket Two 15-way female SUB-D connectors and 2 screw terminals, RC line terminator	2	**TSX SCA 62**	0.570

Cables

Description	Use		No.	Length	Reference	Weight
	From	To		m		kg
Double shielded twisted pair cables	Tap junction TSX SCA 50, subscriber socket TSX SCA 62	Tap junction TSX SCA 50, subscriber socket TSX SCA 62	3	100	**TSX CSA 100**	5.680
				200	**TSX CSA 200**	10.920
				500	**TSX CSA 500**	30.000
Cable for Modbus serial link 1 RJ45 connector and one stripped end	ATS 48, ATV 21, ATV 31, ATV 61, ATV 71 (terminal ports or Modbus serial link ports)	Tap junction TSX SCA 50	4	3	**VW3 A8 306 D30**	0.150
Cable for Modbus serial link 1 RJ45 connector and one 15-way male SUB-D connector	ATS 48, ATV 21, ATV 31, ATV 61, ATV 71 (terminal ports or Modbus serial link ports)	Subscriber socket TSX SCA 62	5	3	**VW3 A8 306**	0.150
Cable for Uni-Telway and Modbus serial link 2 male SUB-D connectors, 9 and 15-way	ATV 61, ATV 71 (+ communication card VW3 A3 303)	Subscriber socket TSX SCA 62	5	3	**VW3 A8 306 2**	0.150

(1) The cable for connecting the PLC and the splitter block depends on the type of PLC; please consult our "Automation platform Modicon Premium - Unity & PL7 software", "Automation platform Modicon Quantum", "Automation platform Modicon TSX Micro – PL7 software" and "Automation and relay functions" specialist catalogues.

Presentation: page 68
Characteristics: page 68

Connection elements using screw terminals

Accessories

Description		Sold in lots of	Reference unit	Weight kg
Line terminators for screw terminals	R = 120 Ω, C = 1 nF	2	**VW3 A8 306 DRC**	0.200
	R = 150 Ω	2	**VW3 A8 306 DR**	0.200

Cable

Description	Use		Length	Reference	Weight
	From	To	m		kg
Cable for Modbus 1 RJ45 connector and one stripped end	ATS 48, ATV 21, ATV 31, ATV 61, ATV 71 (terminal ports or Modbus serial link ports)	Standard screw terminal, tap junction TSX SCA 50	3	**VW3 A8 306 D30**	0.150

Documentation

The manuals and quick reference guides for starters and variable speed drives, as well as the user manuals for communication gateways, are available on the website: www.telemecanique.com.

The efficiency of Telemecanique branded *solutions*

Used in combination, Telemecanique products provide quality solutions, meeting all your Automation and Control applications requirements.

Simple machines
Altistart 01: 0.37 to 75 kW
Altivar 11: 0.18 to 2.2 kW
Altivar 31: 0.18 to 15 kW

Complex, high power machines
Altivar 71: 0.37 to 500 kW

Pumping and ventilation machines
Altistart 48: 4 to 1 200 kW
Altivar 11...347: 0.18 to 2.2 kW
Altivar 21: 0.75 to 75 kW
Altivar 61: 0.75 to 630 kW

A worldwide presence

Constantly available
- More than 5 000 points of sale in 130 countries.
- You can be sure to find the range of products that are right for you and which complies fully with the standards in the country where they are used.

Technical assistance wherever you are
- Our technicians are at your disposal to assist you in finding the optimum solution for your particular needs.
- Schneider Electric provides you with all necessary technical assistance, throughout the world.

www.telemecanique.com

ARCO CONTROL
:051-37133855-6
:09014284236
WWW.ARCOKALA.COM

Simply Smart !

Schneider Electric Industries SAS

Head Office
89, bd Franklin Roosevelt
92506 Rueil-Malmaison Cedex
France

www.schneider-electric.com

Due to evolution of standards and equipment, the characteristics indicated in texts and images of this document do not constitute a commitment on our part without confirmation.
Design: Schneider Electric
Photos: Schneider Electric
Printed by:

DIA2ED2051209EN

ART. 815133

10 / 2006 - V2.0